ASSEMBLY INSTRUCTIONS

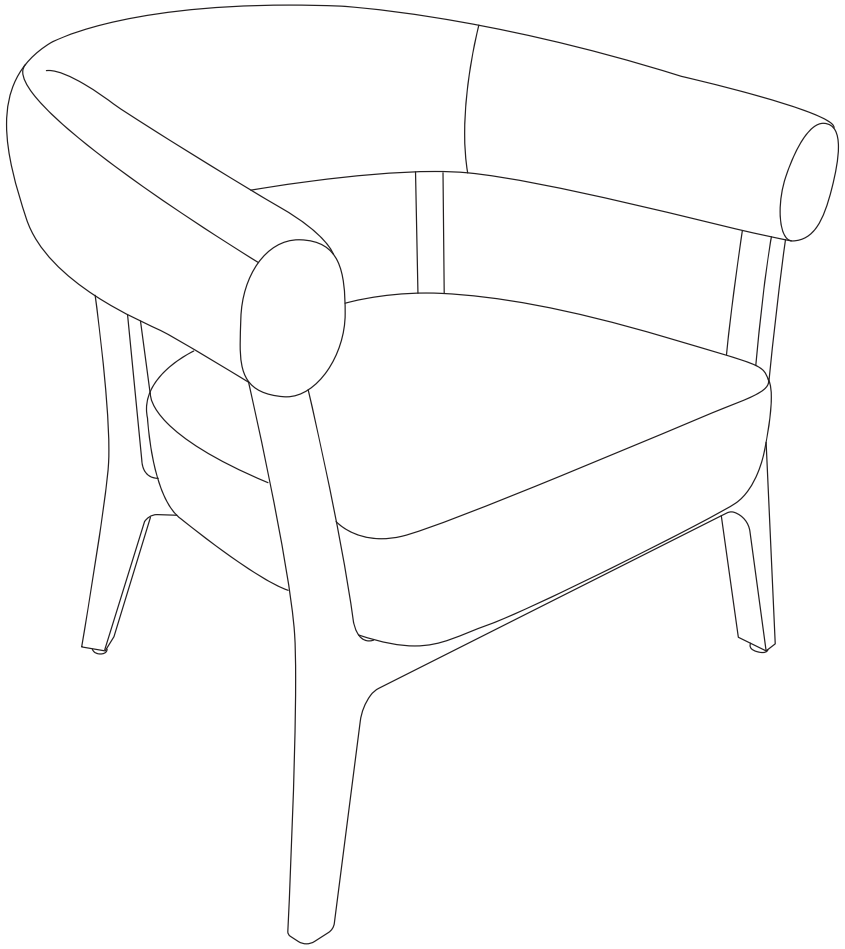

LIVING
WITH ART

www.artleon.com
Email: hello@artleon.com

7



Q X 1

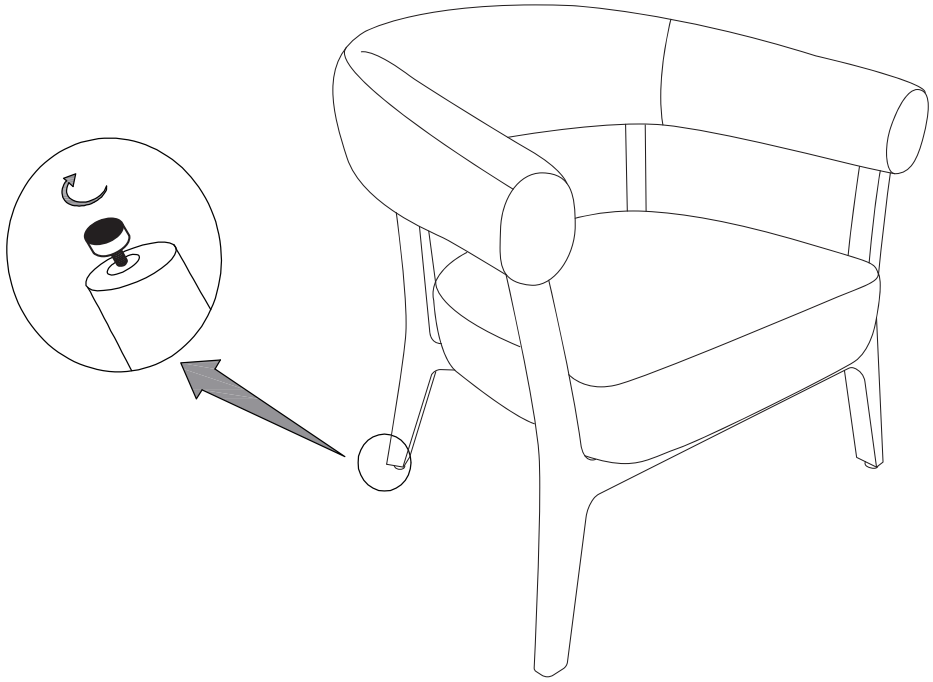

Be sure to keep spare parts.

**If screws or nails of a product are damaged or lost,
or screws or nails of a subsequent product are
damaged or aged, spare parts can be used to replace them.**

Fully tighten ALL screws before use.

**If you feel the chair is not balance
You can adjust the foot nails to level according to your needs.**

6



B X 1



M6*50MM+M6*14*1MM

I X 4



M4-M6

P X 1

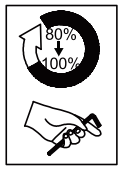

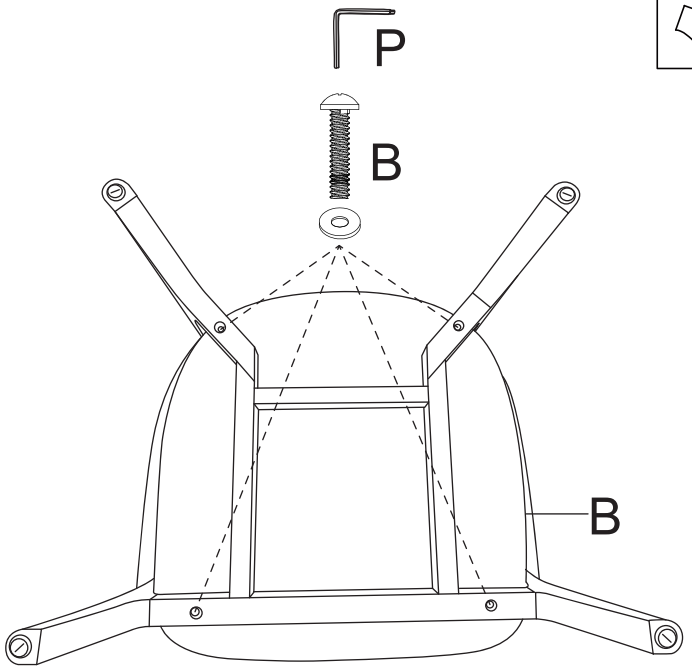

Install the 4 screws I to 80% in sequence.
After All 4 screws are installed,tighten them to 100%.

SPARE PARTS

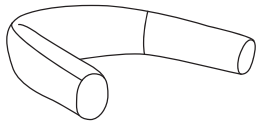

A X 1

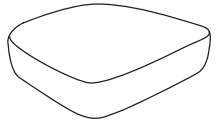

B X 1

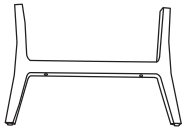

C X 1



D X 1

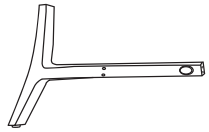

E ⑤ X 1

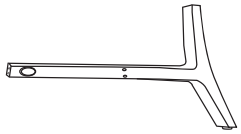

F ⑥ X 1

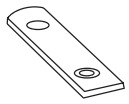

G X 4



M6*40MM+M6*14*1MM

H X 4+1



M6*50MM+M6*14*1MM

I X 4+1

SPARE PARTS



M6*70MM

J X 2+1



M6*25MM

K X 4+1



M6*30MM

L X 4+1







M6*10MM

M X 2+1



M8*40MM

N X 2+1



10MM

O X 1



M4-M6

P X 1



Q X 1
(Extra)

5

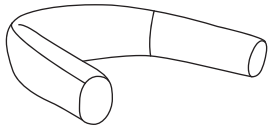

A X 1



M6*30MM

L X 4



M4-M6

P X 1

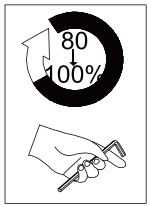

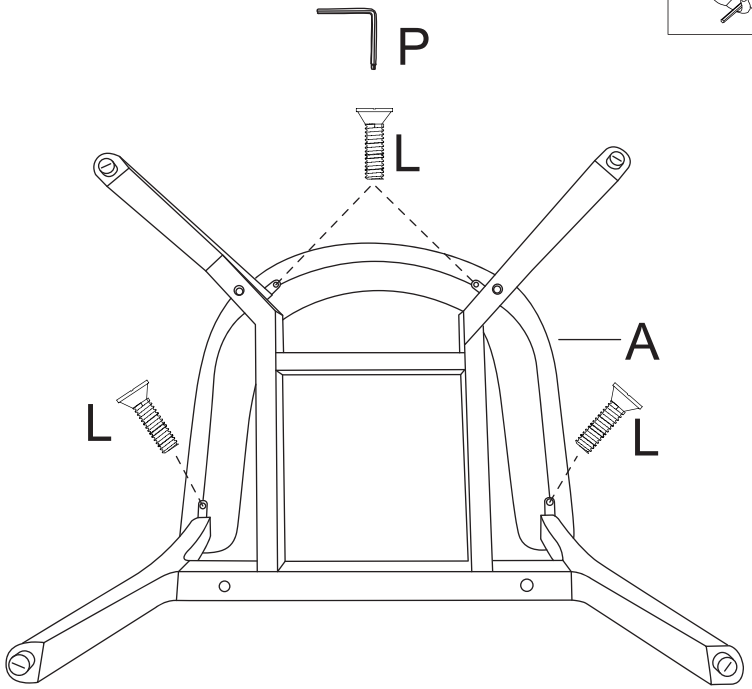

Install the 4 screws L to 80% in sequence.
After All 4 screws are installed,tighten them to 100%.

4



G X 4

M6*25MM

K X 4



M4-M6

P X 1

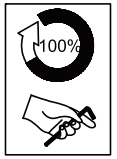

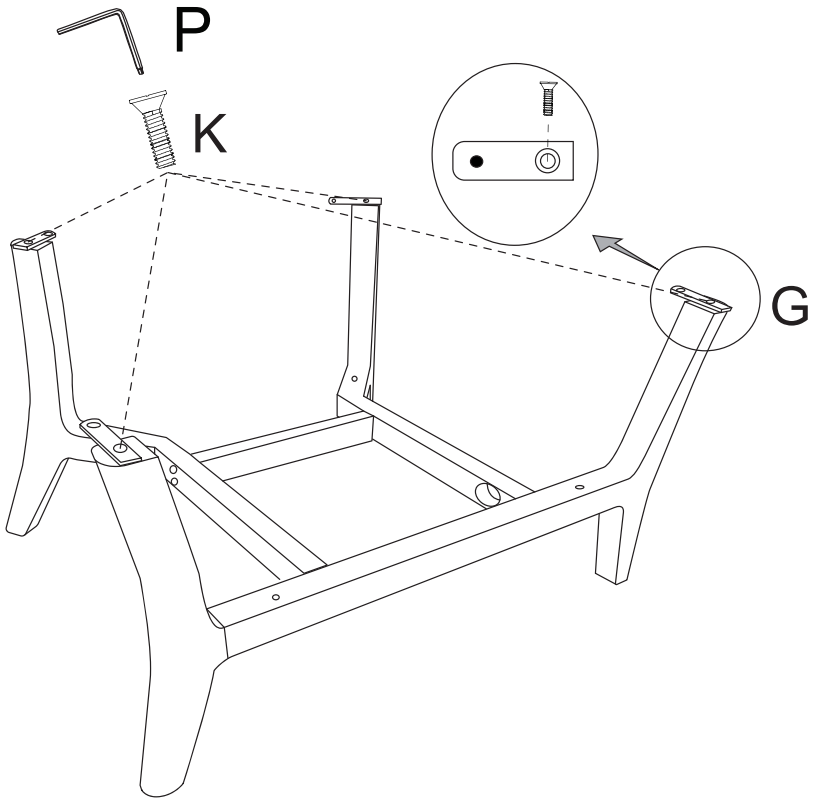

Install the 4 screws K to 80% in sequence.
After All 4 screws are installed,tighten them to 100%..

1



D X 1

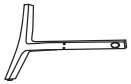

E X 1

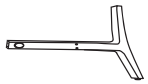

F X 1



M6*40MM+M6*14*1MM

H X 4



M4-M6

P X 1

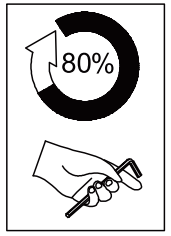

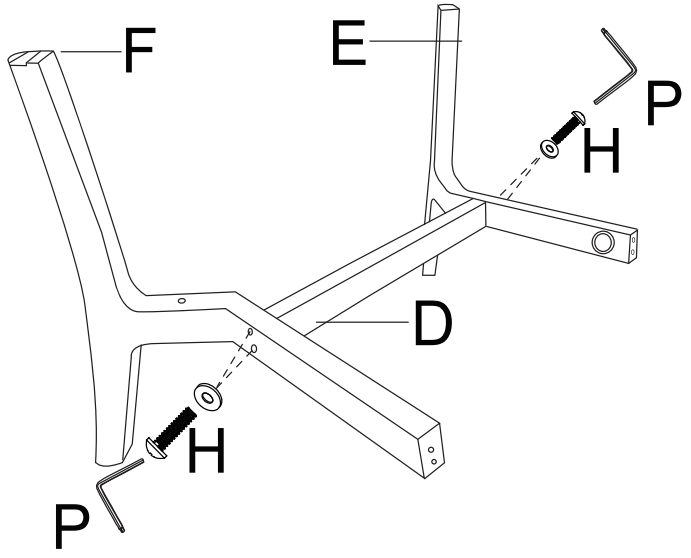

Assemble the Frame E and F to Frame D through Screws (H) as shown.

2

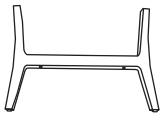

C X 1

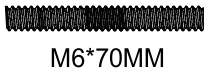

J X 2

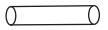

N X 2

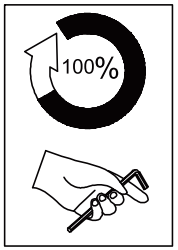

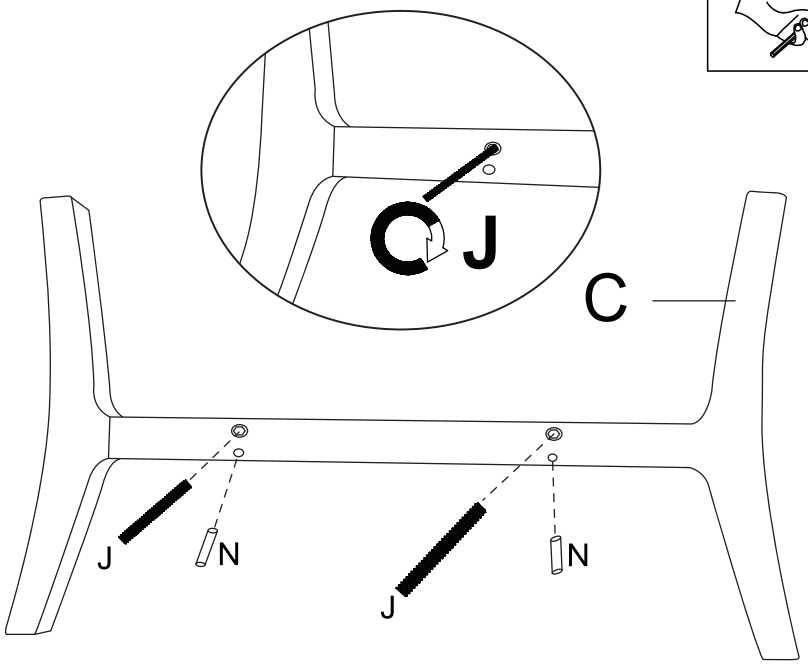

Assemble 2 Bolts (J) into the screw holes and insert 2 wood screws (N) into holes.

3







M6*10MM

M X 2



10MM

O X 1

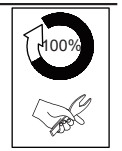

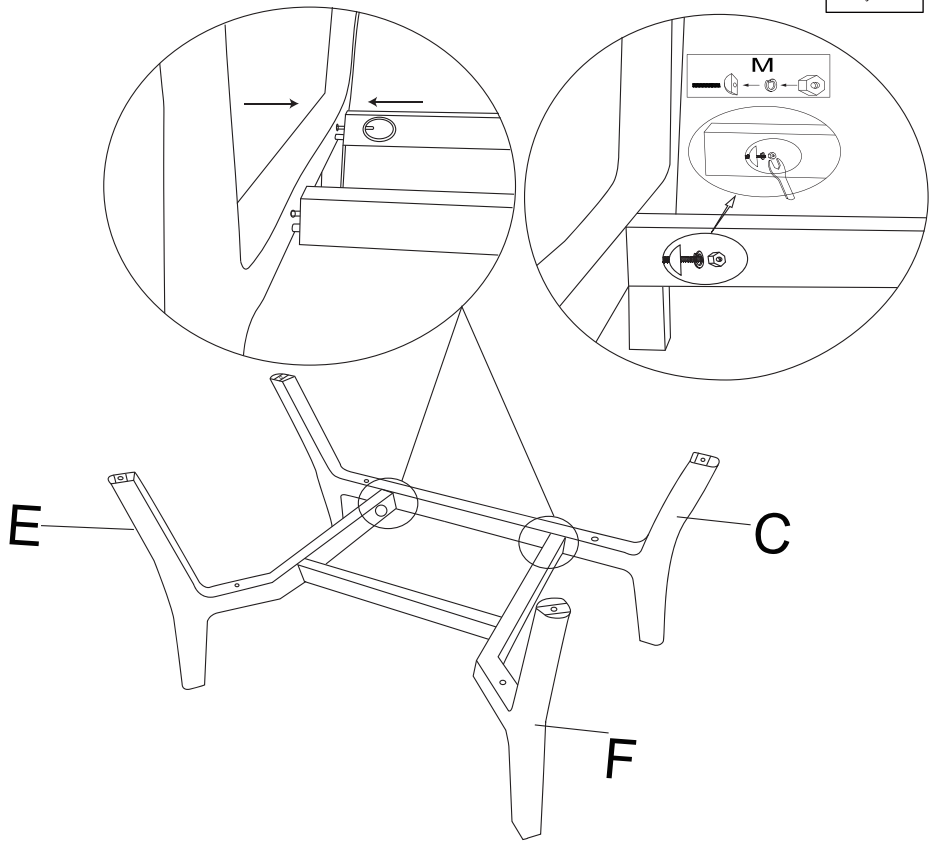

Assemble the Frame E and F to Frame C through Hardware (M) as shown.