ASSEMBLY INSTRUCTIONS

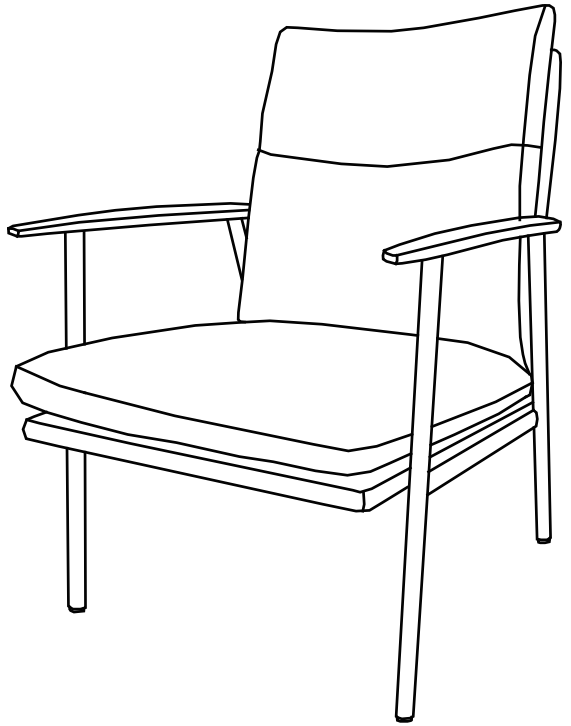

www.artleon.com
Email: hello@artleon.com

Be sure to keep spare parts.

**If screws or nails of a product are damaged or lost,
or screws or nails of a subsequent product are
damaged or aged, spare parts can be used to replace them.**

BALANCE ADJUSTMENT

If the chair is not stable after assembling, please use the adjustable feetcap to make the chair balance.

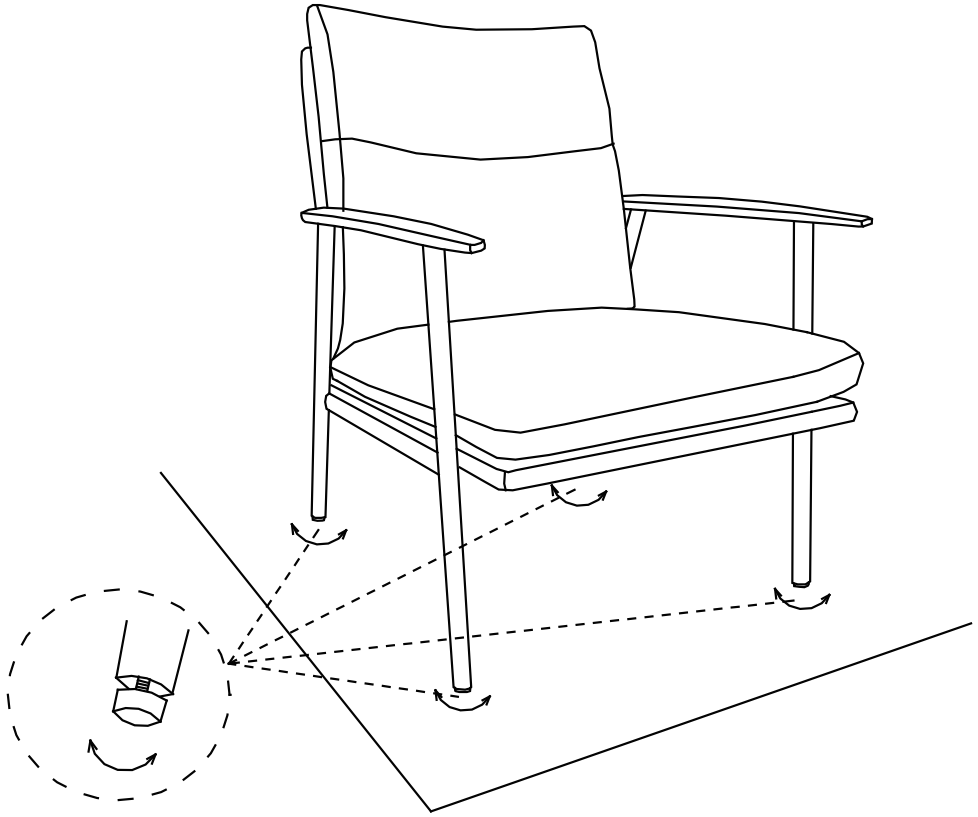

SPARE PARTS

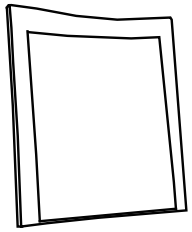

Ax1

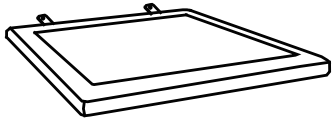

Bx1

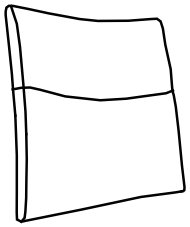

Cx1

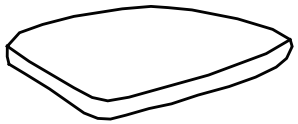

*D*x1



*E*x1

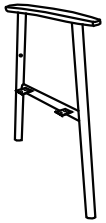

*F*x1

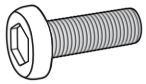

Gx2+1extra

(M6*30mm)

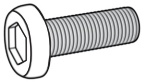

Hx12+1extra

(M8*30mm)

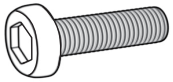

Ix2+1extra

(M6*50mm)



Jx12+1extra



Kx12+1extra



Lx1

1

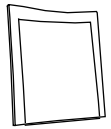

Ax1

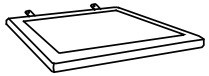

Bx1

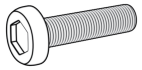

Gx2



Lx1

2



Ex1

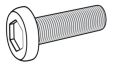

Hx6

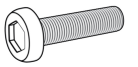

Ix1



Jx6



Kx6



Lx1

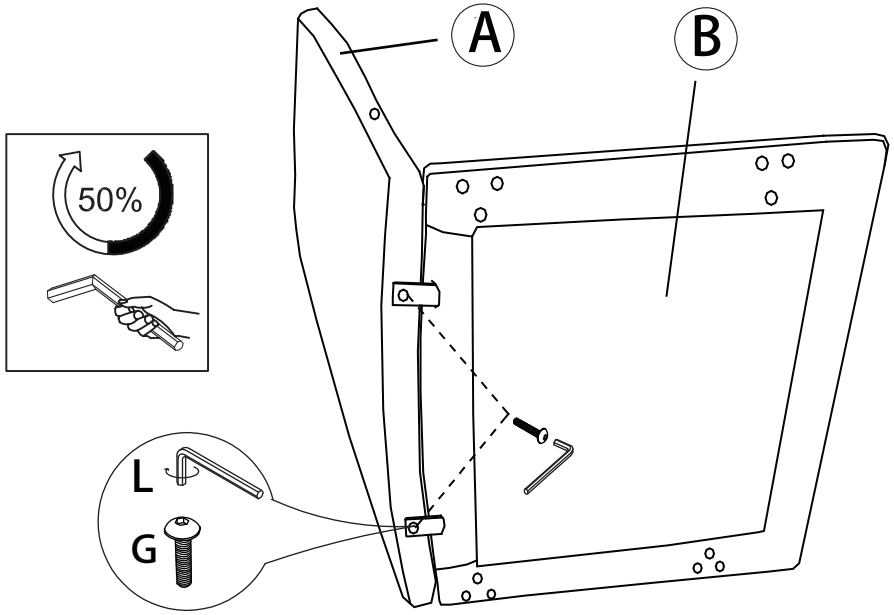

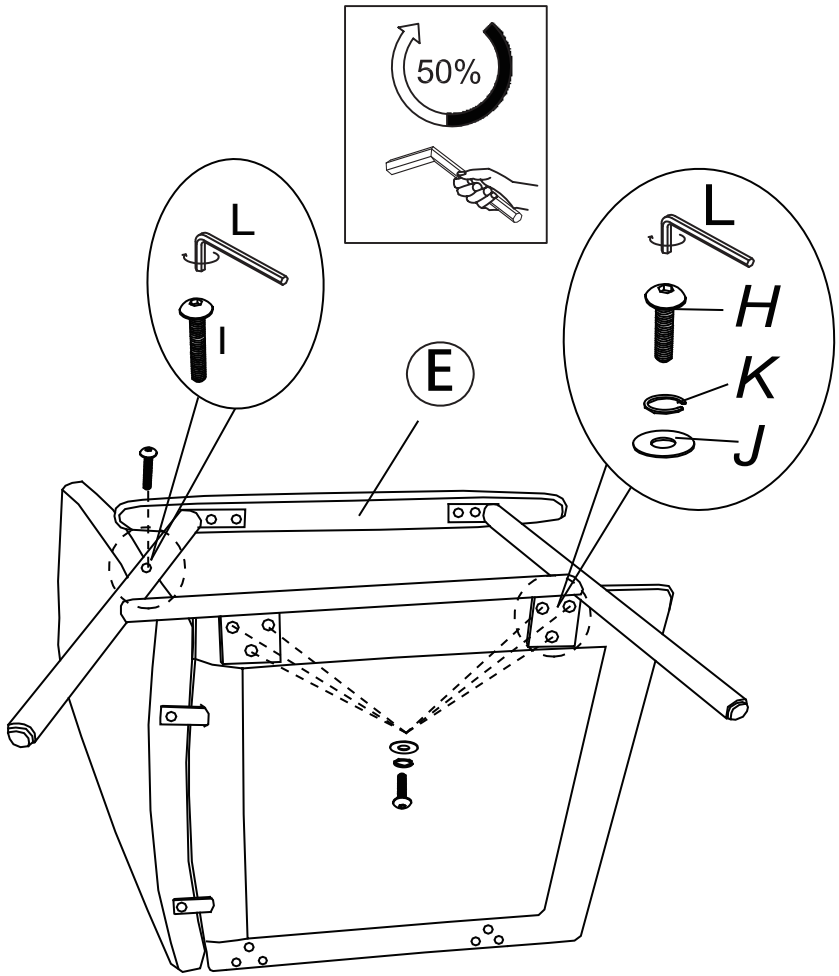

3

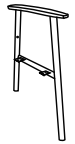

Fx1

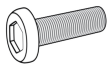

Hx6

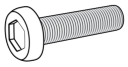

Ix1



Jx6



Kx6



Lx1

4



Lx1

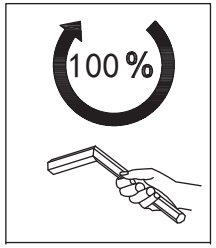

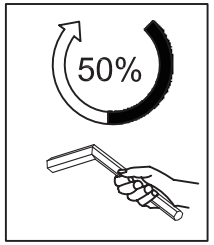

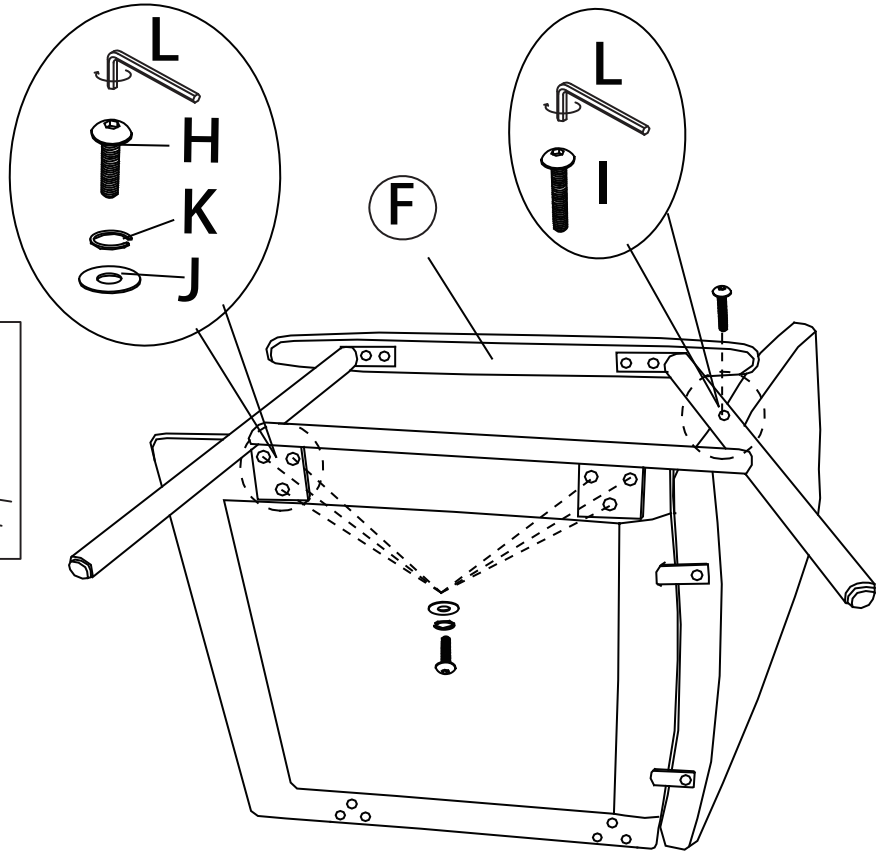

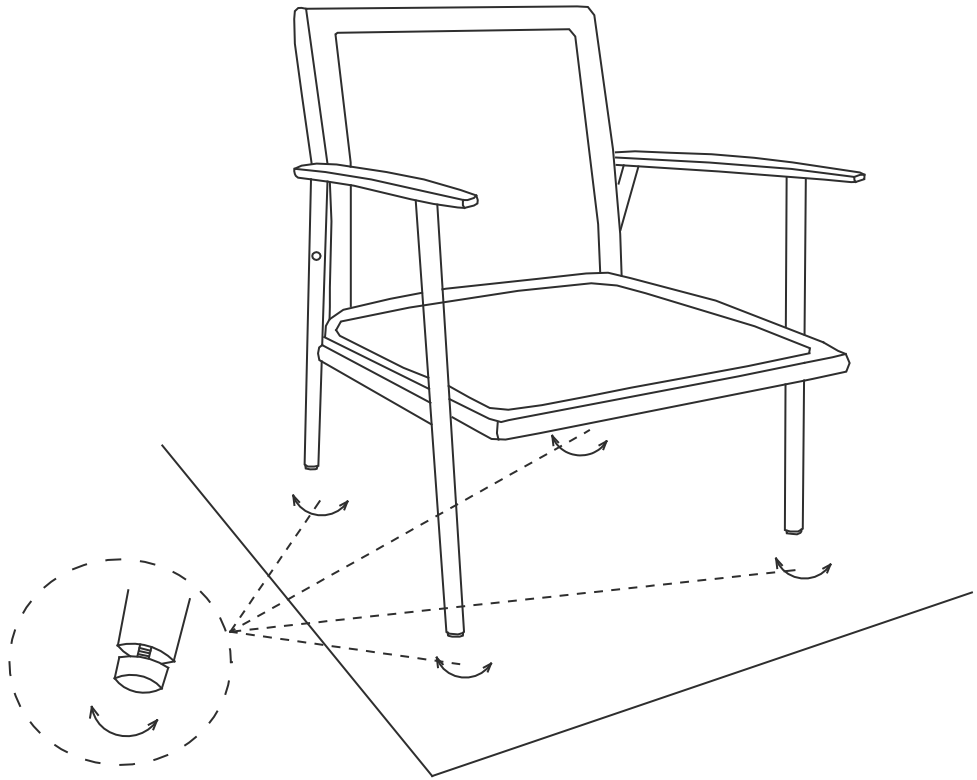

5

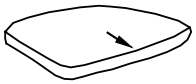

***D*x1**

6

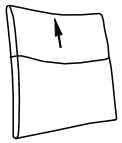

Cx1

