Instruction manual of Chair

A

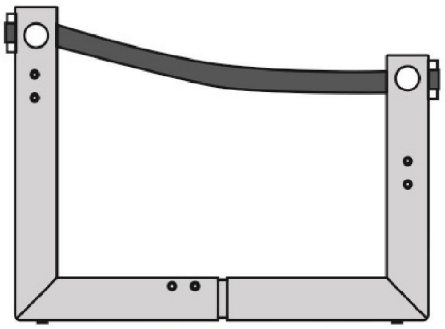

Left leg * 1

B

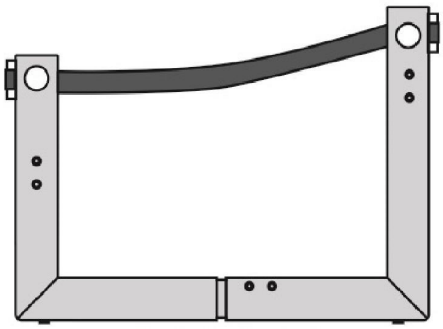

Right * 1

C

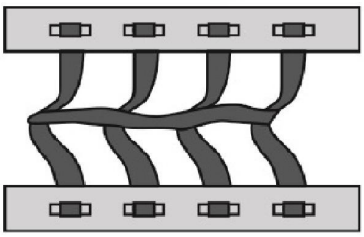

Connect part * 1 set

D



Connect wood * 1

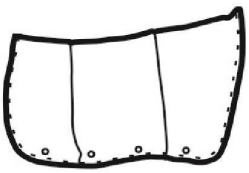

F

Armrest cushion * 2

E

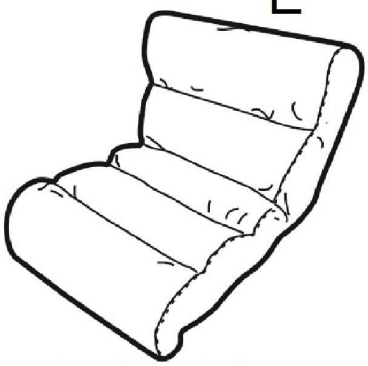

Seat cushion * 1

Screws 12+1 (backup)
Rings 12+2 (backup)
Positioning component * 6 (backup)
Tool *1
Leg nail*1 (backup) (Attention: Easy to stab, please place it properly)
wooden stick (backup)

Step 1:
Place the screws in the holes and connect the accessory

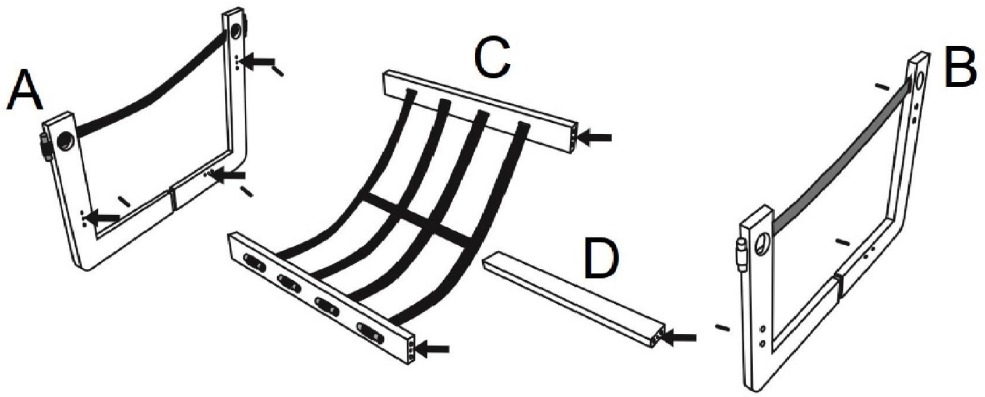

Step 2:
Don`t tighten up all screws at once.
After all screws are screwed into the holes, shake the wooden legs to ensure that level with the ground, then tighten all screws
(Attention: Please don`t tighten too tightly to avoid wood cracking)

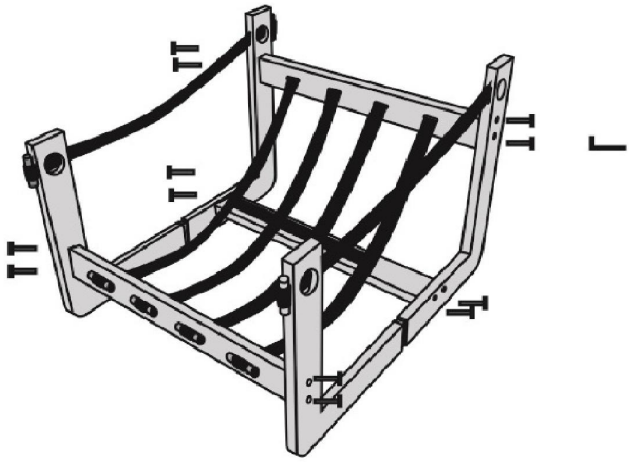

Step 3:
Place the seat cushion and armrest cushions on the wooden frame

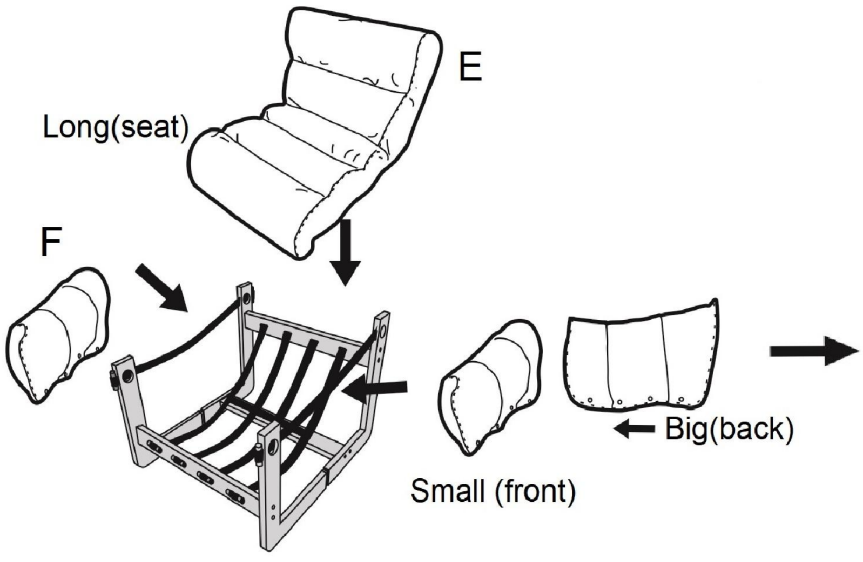

Congratulations, after your effort, you can enjoy the comfortable feeling of the chair now.

