ASSEMBLY INSTRUCTIONS

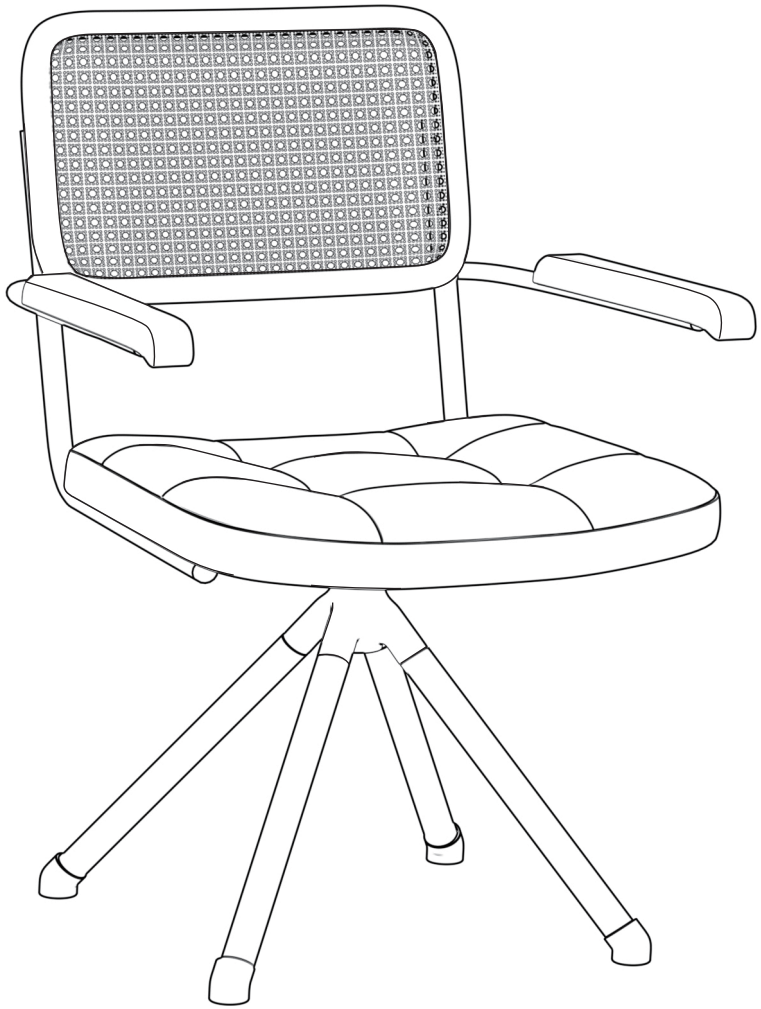

DINING CHAIR

www.artleon.com
Email: hello@artleon.com

Be sure to keep spare parts.

**If screws or nails of a product are damaged or lost,
or screws or nails of a subsequent product are
damaged or aged, spare parts can be used to replace them.**

7

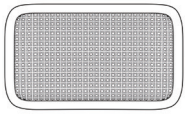

Gx1

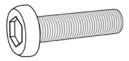

Kx4

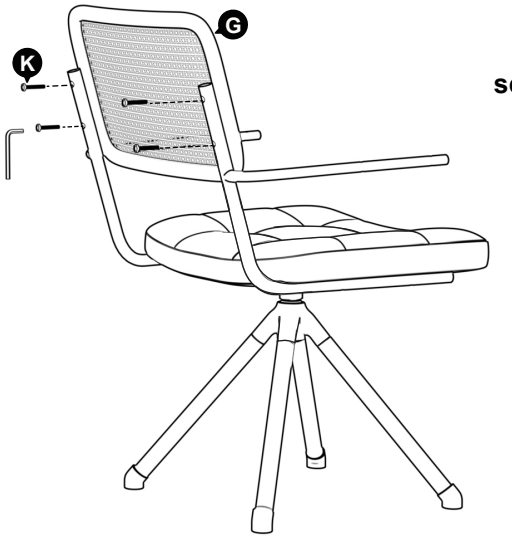

**Please tighten
screw K to 100%**

8



Hx2

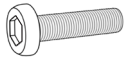

Kx4

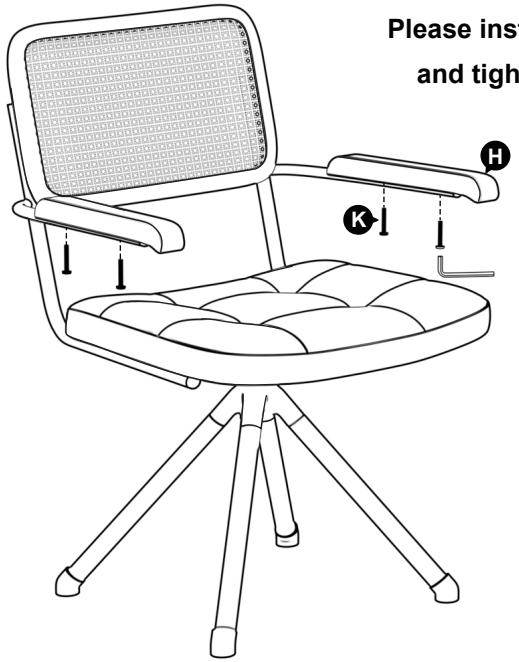

**Please install screw K to 100%
and tighten screw L to 100%**

1



Ax1

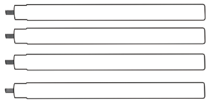

Bx4

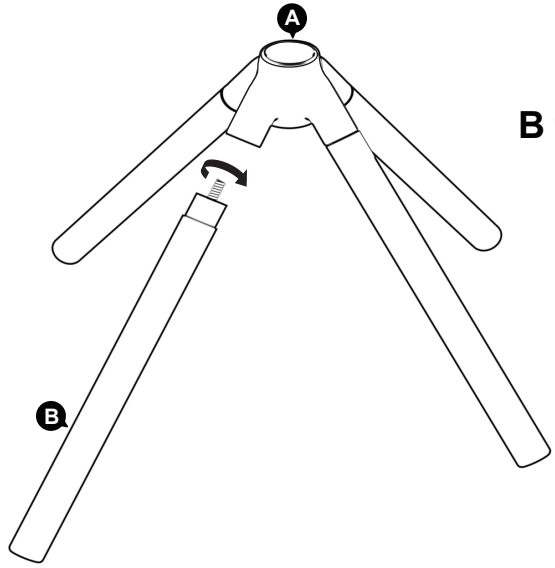

Please tighten
B 100% clockwise

2

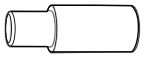

Cx1



Ix4

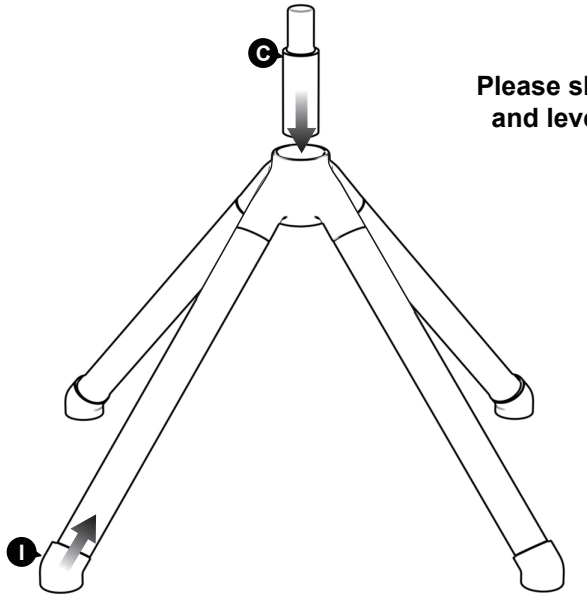

Please slip **I** into part **B**
and level with the floor

3



Dx1



Ex1

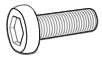

Jx4



Mx4

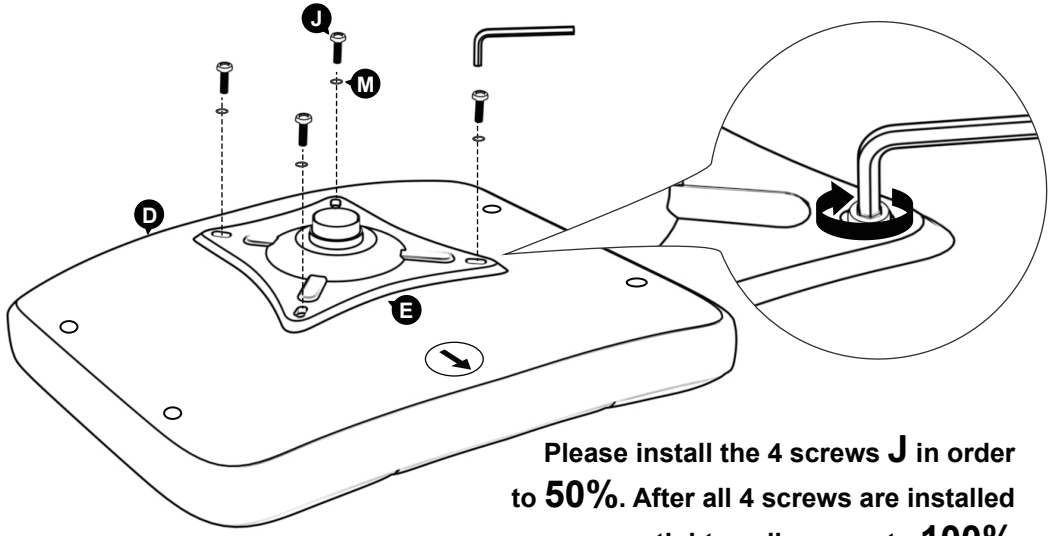

Please install the 4 screws **J** in order
to **50%**. After all 4 screws are installed
tighten all screws to **100%**

4



Fx1 (L)

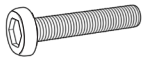

Lx2

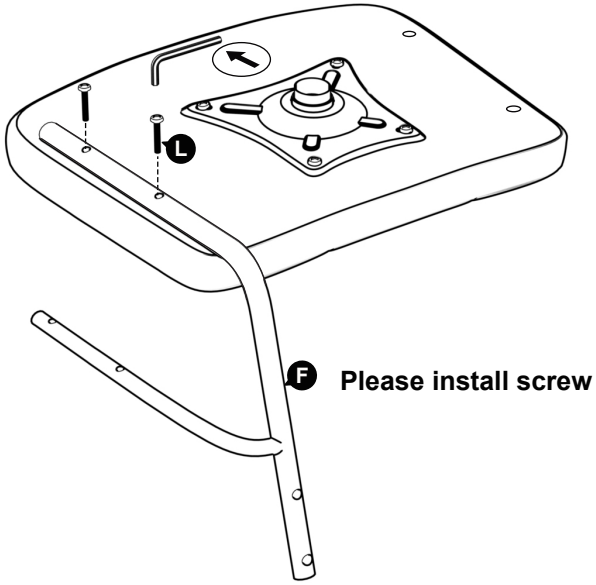

Please install screw **L** to **50%**

5



Fx1 (R)

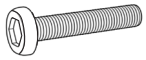

Lx2

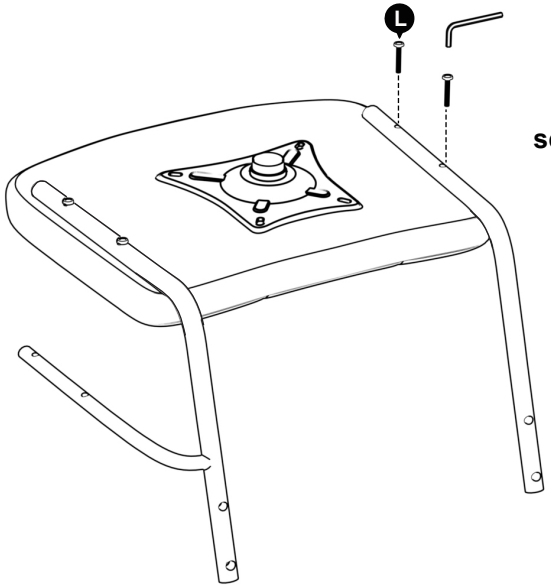

Please install screw L to 50%

6

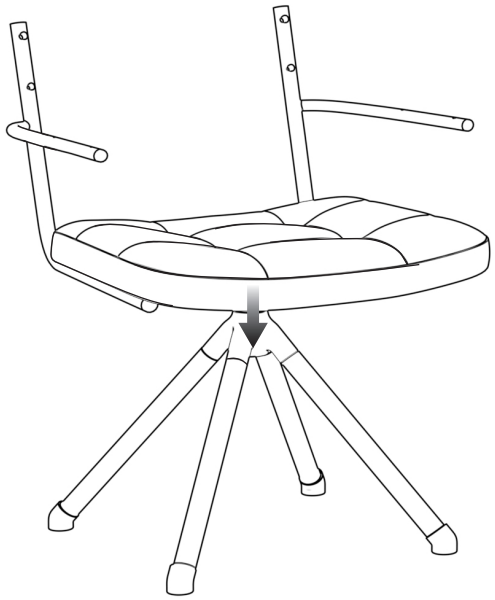

SPARE PARTS

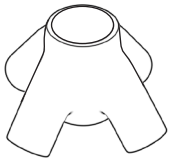

Ax1

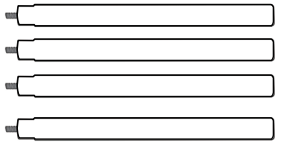

Bx4



Cx1

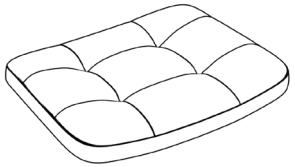

Dx1

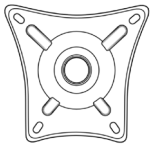

Ex1

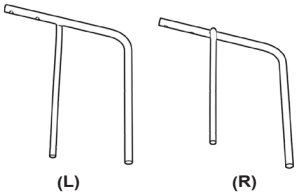

Fx2

Please note that part F has a left and right distinction.

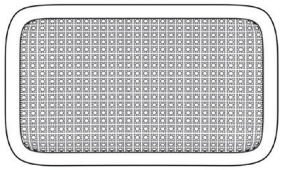

Gx1

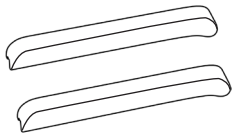

Hx2



Ix4

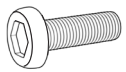

Jx4+1extra
(M6*25mm)

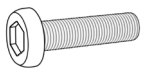

Kx8+1extra
(M6*35mm)

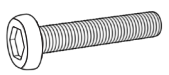

Lx4+1extra
(M6*40mm)



Mx4



Nx1