ASSEMBLY INSTRUCTIONS

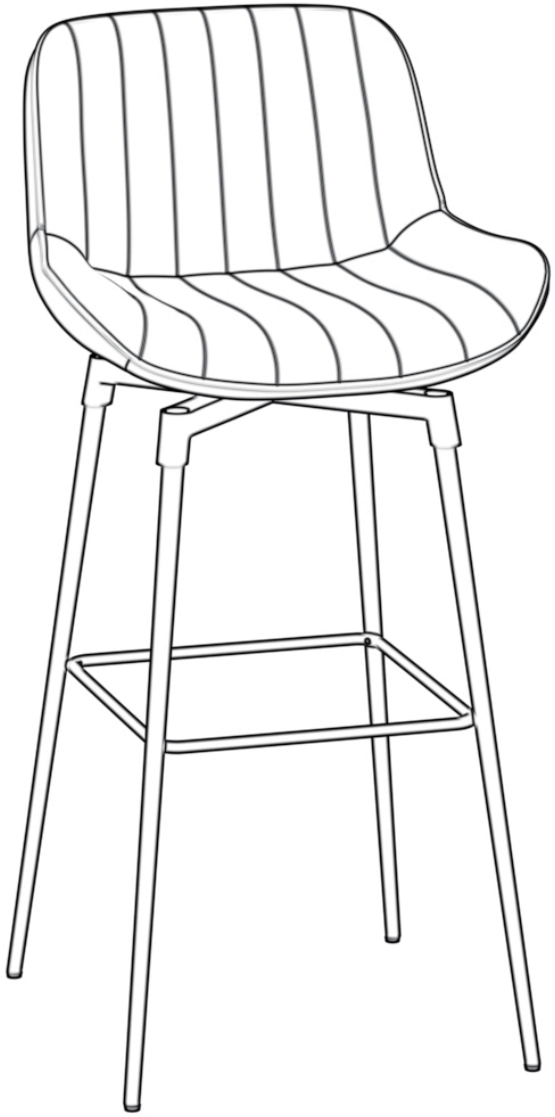

BAR STOOL

www.artleon.com
Email: hello@artleon.com

If you feel the chair is not balance, you can adjust the foot nails to the suitable level according to your needs

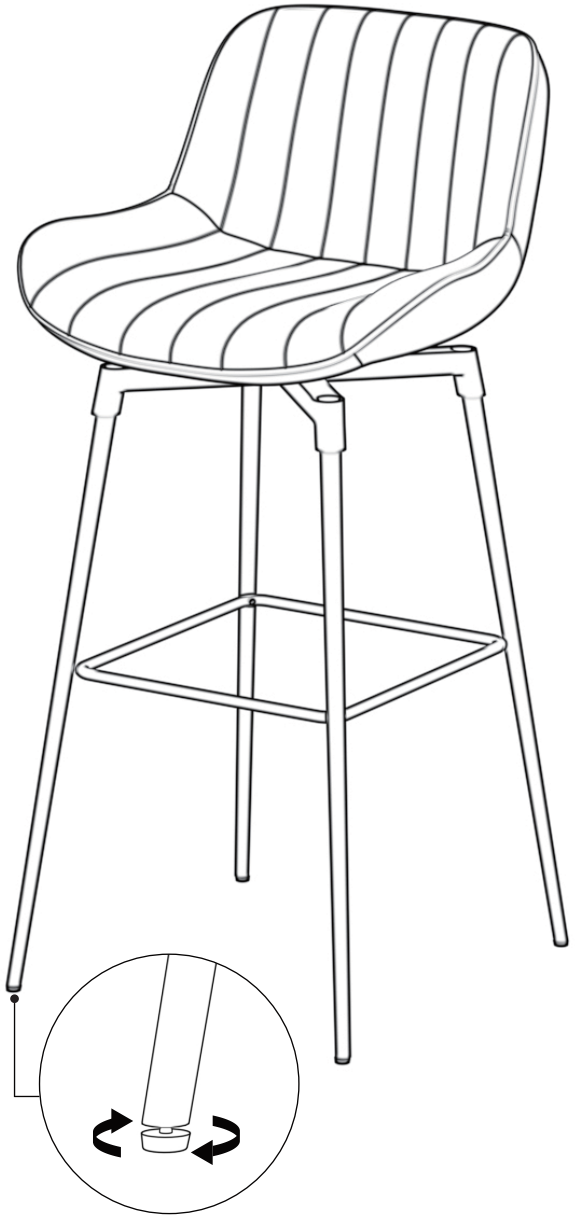

Be sure to keep spare parts.

If screws or nails of a product are damaged or lost, or screws or nails of a subsequent product are damaged or aged, spare parts can be used to replace them.

1



Ax4

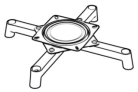

Bx1



Hx4



Ix4

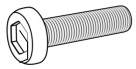

Gx4

2

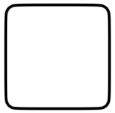

Cx1

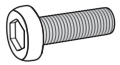

Fx4

Please install screw G to 50% in order first

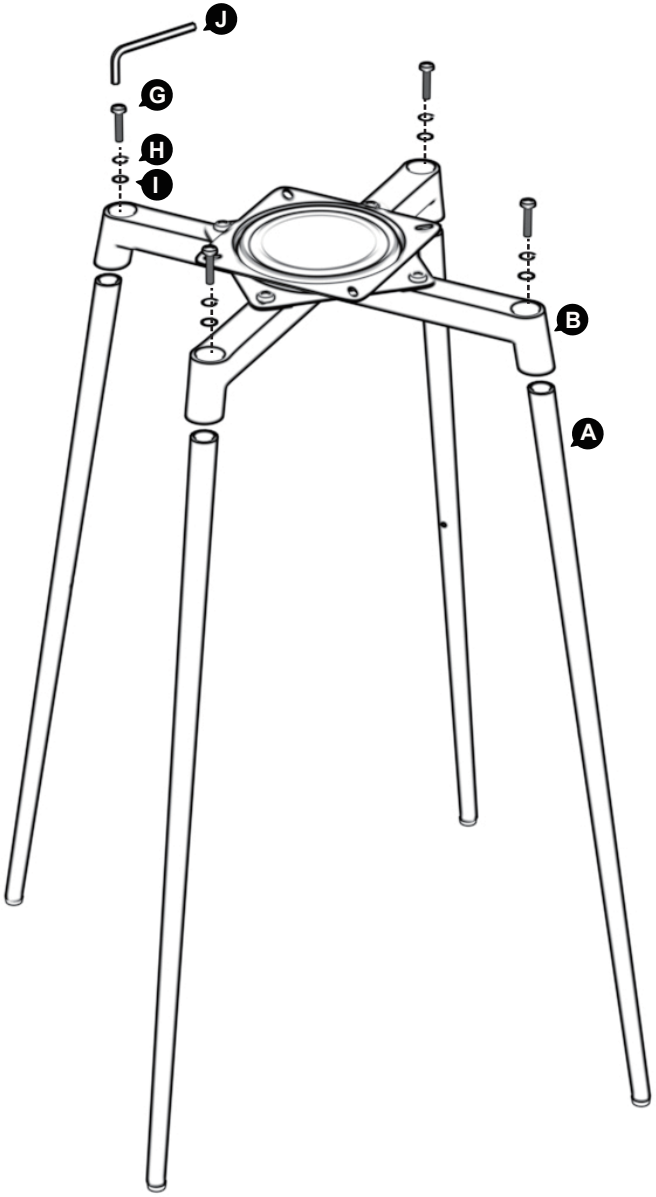

Install four screws F to 50% in sequence first.
After all four screws are installed, tighten all screws to 100%

1

Please tighten step 1 screw G to 100%

2

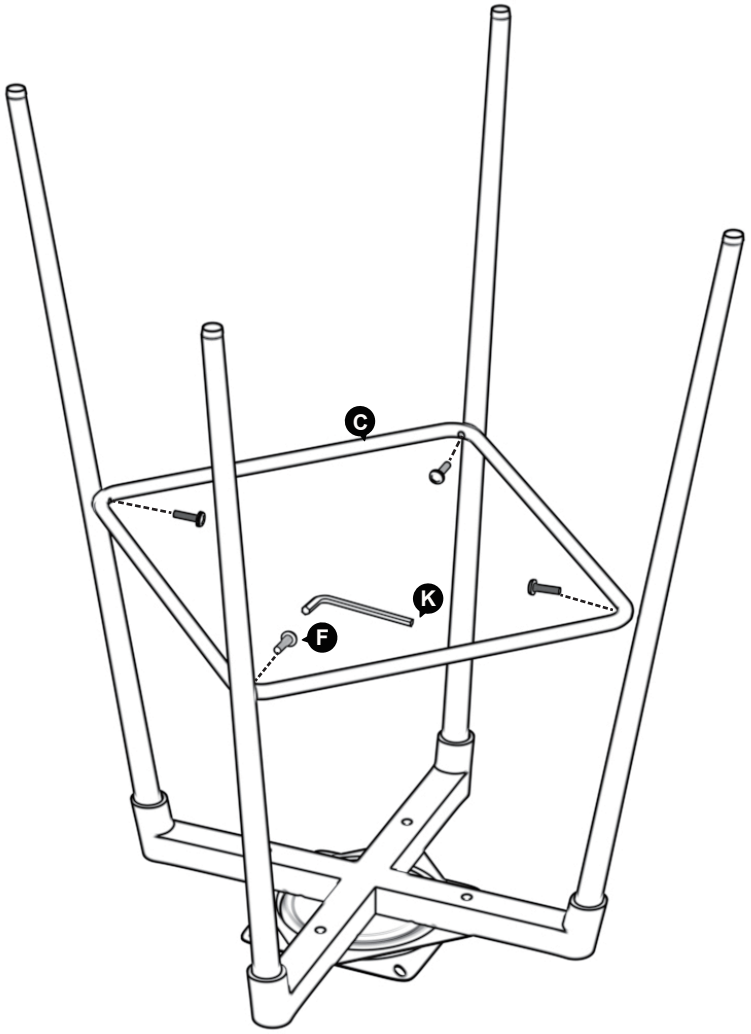

3



D x1

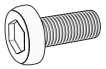

Ex4

Install four screws E to 50% in sequence first.
After all four screws are installed, tighten all screws to 100%

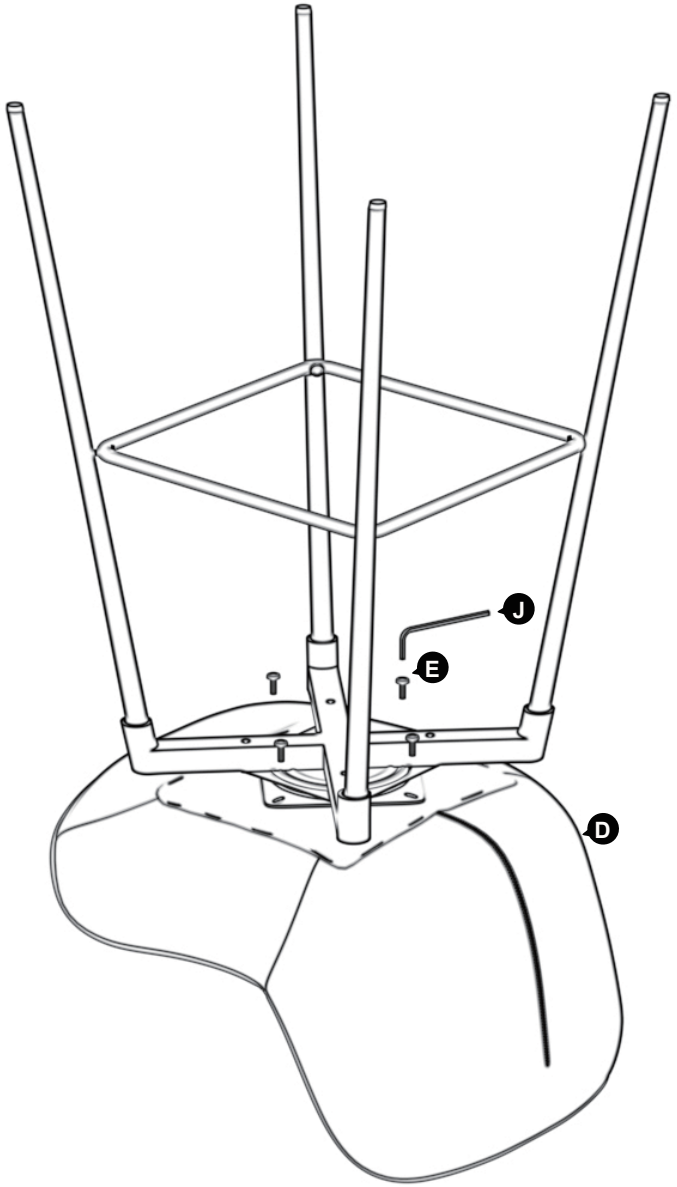

SPARE PARTS



Ax4

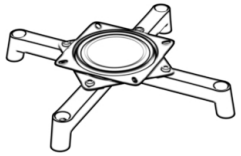

Bx1

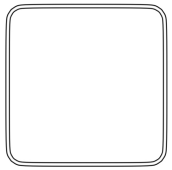

Cx1

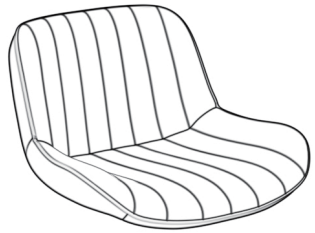

Dx1

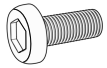

Ex4+1extra
(M6*16mm)

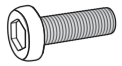

Fx4+1extra
(M6*20mm)

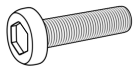

Gx4+1extra
(M6*30mm)

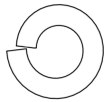

Hx4

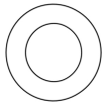

Ix4

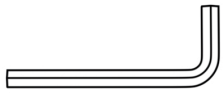

Jx1

ASSEMBLY INSTRUCTIONS

1 - 正

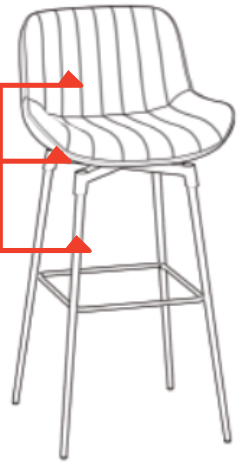

www.artleon.com
Email: hello@artleon.com
5005 ONTARIO MILLS PARKWAY, ONTARIO CA 91761

BAR STOOL

4

If you feel the chair is not balance, you can adjust the foot nails to the suitable level according to your needs

1 - 背



Be sure to keep spare parts.

If screws or nails of a product are damaged or lost, or screws or nails of a subsequent product are damaged or aged, spare parts can be used to replace them.

1



2



Please install screw G to 50% in order first

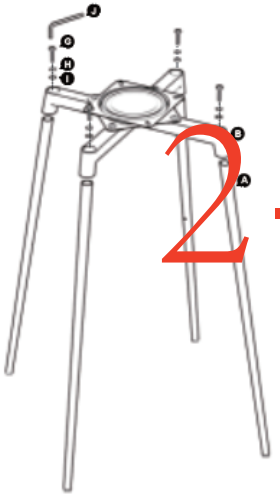

Install four screws F to 50% in sequence first.
After all four screws are installed, tighten all screws to 100% ❶

Please tighten step 1 screw G to 100% ❷

2 - 正

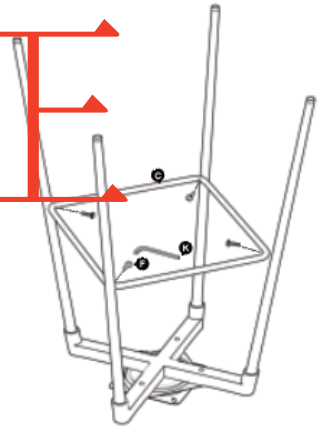

3



Install four screws E to 50% in sequence first.
After all four screws are installed, tighten all screws to 100%

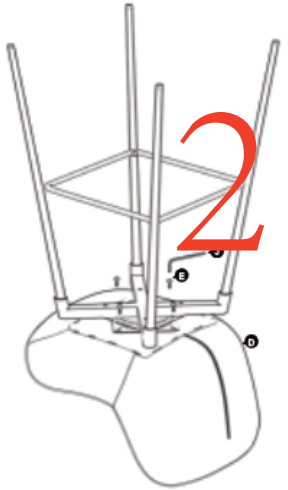

2 - 背

SPARE PARTS

