ASSEMBLY INSTRUCTIONS

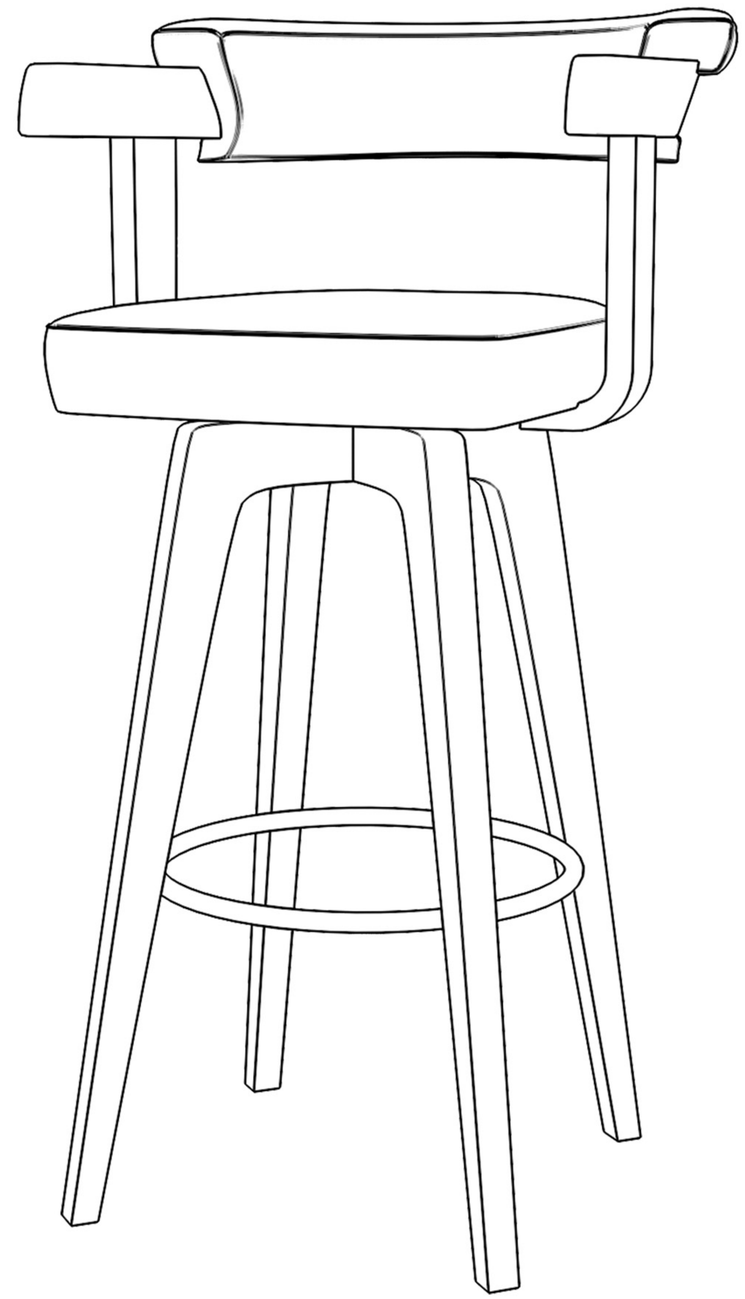

BAR STOOL

www.artleon.com
Email: hello@artleon.com

PARTS

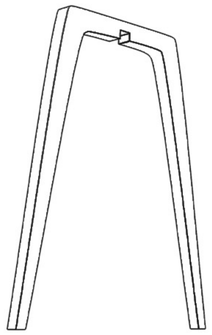

Ax1

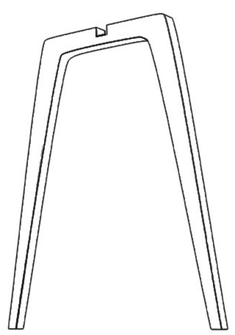

Bx1

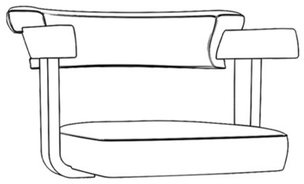

Cx1

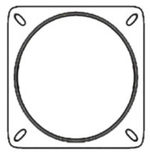

Dx1

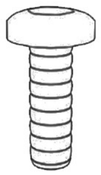

M6x20mm

Ex4+1Ext

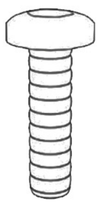

M6x30mm

Fx8+1Ext

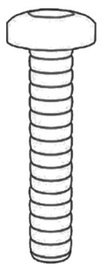

M6x40mm

Gx1+1Ext



foot pin

Hx4+1Ext

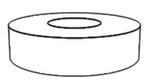

5mm thickness
rubber washer

Ix2+1Ext

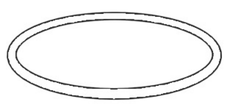

Jx1



Kx1

2

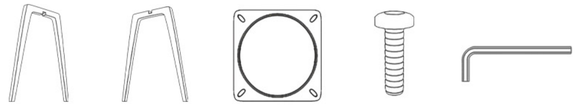

Ax1 Bx1 Dx1 Fx4 kx1

First, turn D by 45 degrees, then set it on the chair leg from step 1. Next, insert the four F screws and tighten them to 50% to D and the chair leg from step 1. Finally, fully tighten the four F screws to 100%.

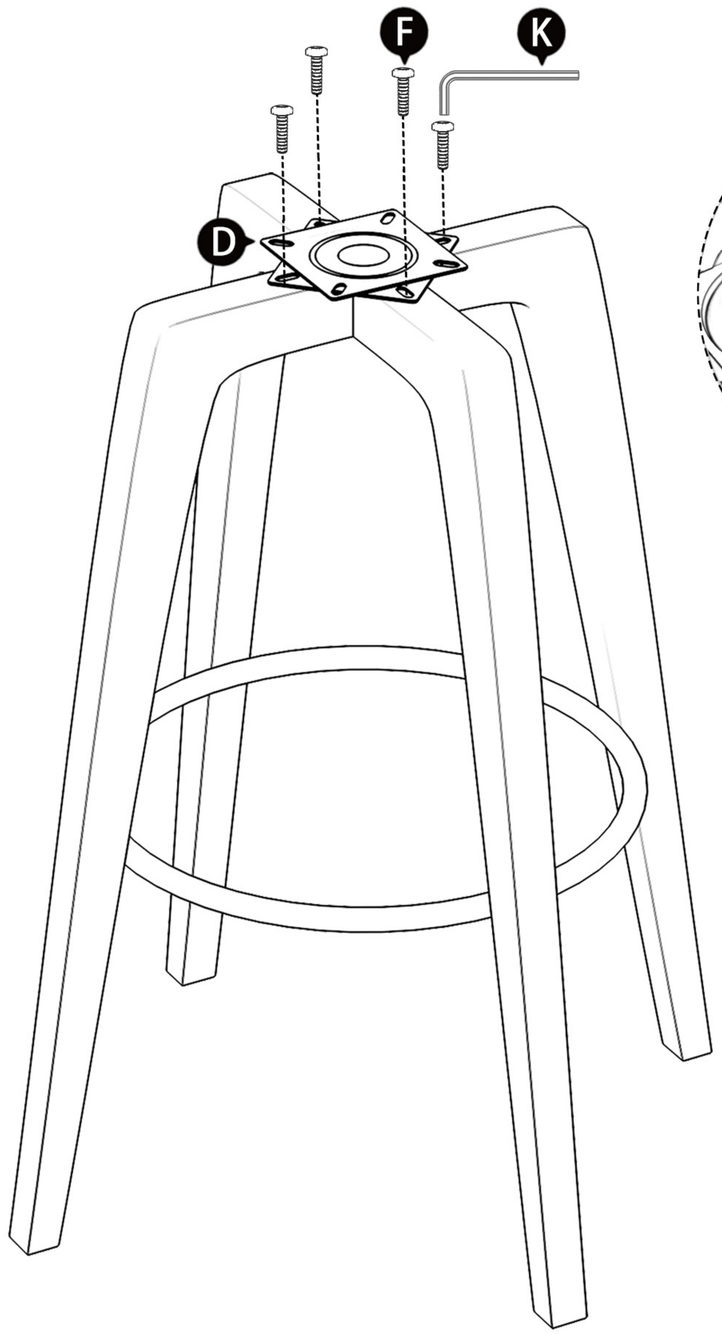

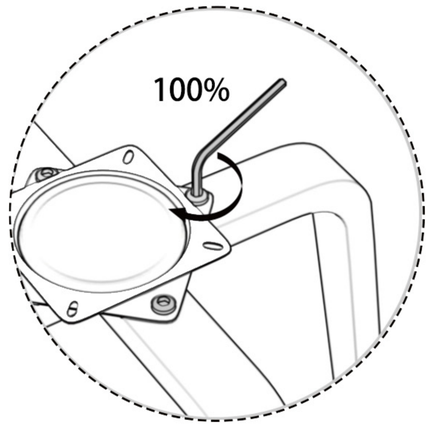

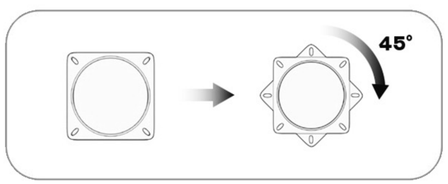

3

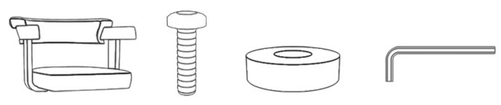

Cx1 Ex4 Ix2 kx1

Install step 2 to C, placing I under the front C screw hole. Then, pass the four E through step 1 and I, and tighten C to 50%. Finally, tighten it to 100%.

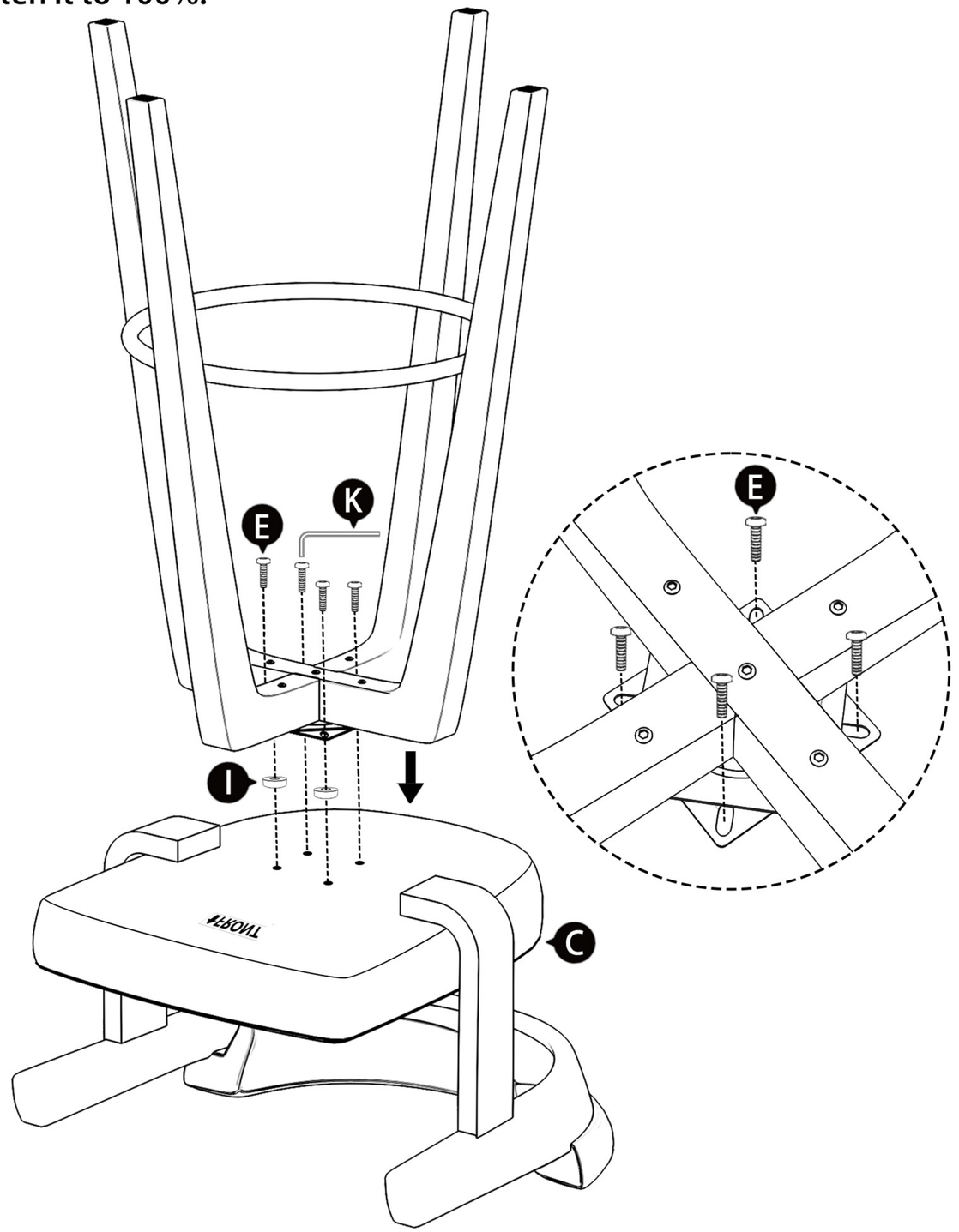

4



Hx4

Adjust the chair balance by twisting the H screw.

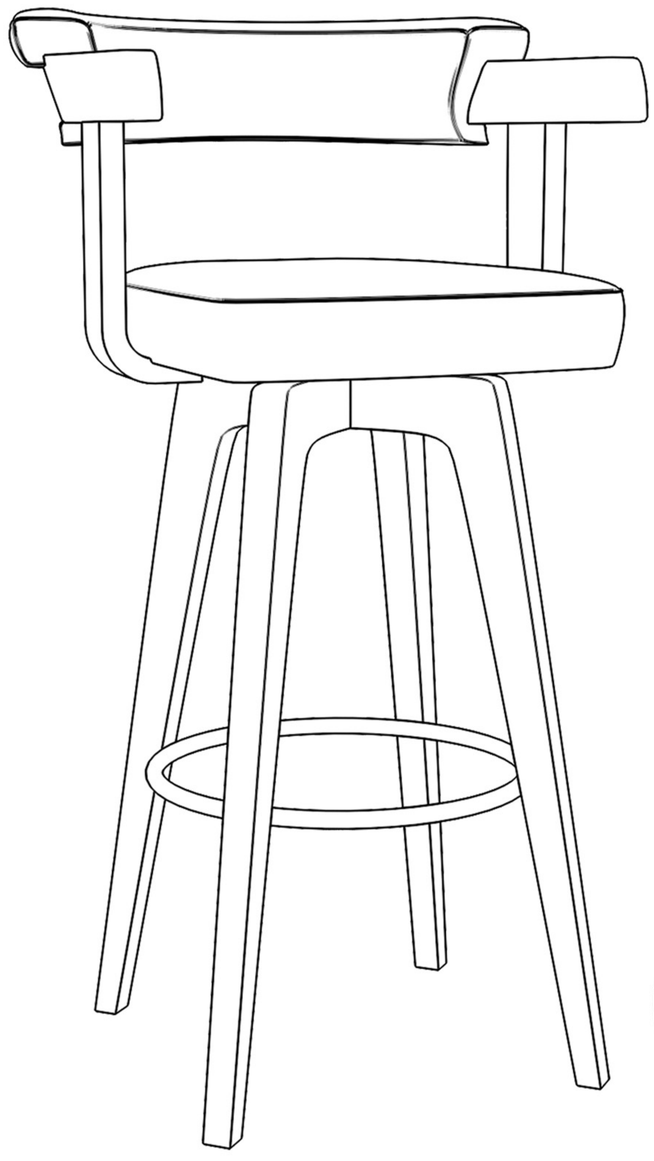

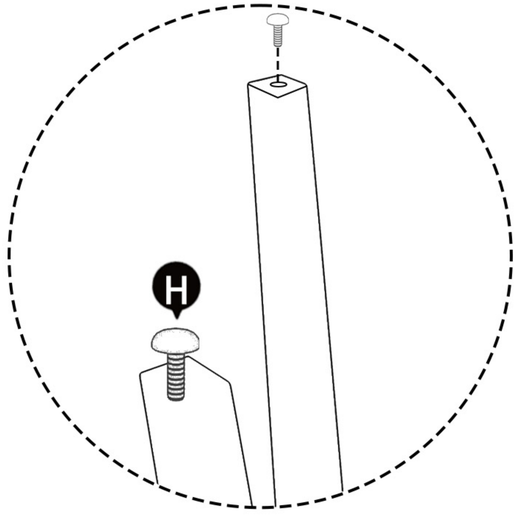

1

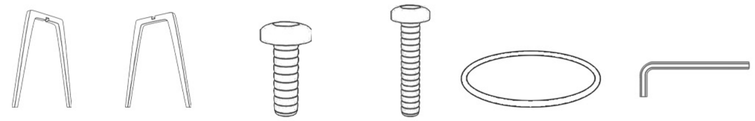

Ax1 Bx1 Fx4 Gx1 Jx1 kx1

First, place B on top of A, then tighten G onto B,
and then screw 4 F's into the four holes of J, finally tighten to 100%.

