ASSEMBLY INSTRUCTIONS

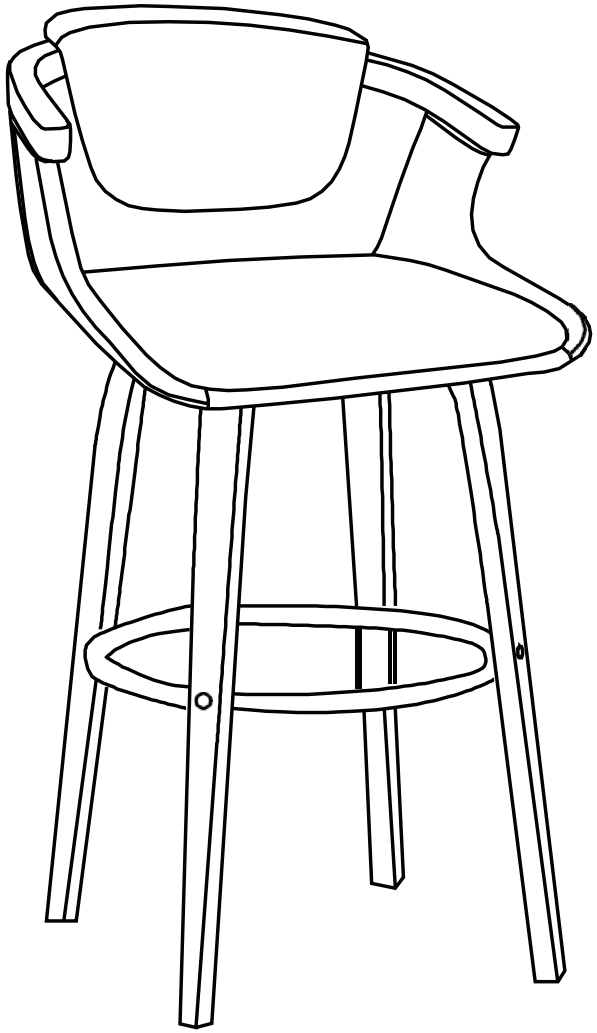

www.artleon.com
Email: hello@artleon.com

8



Lx4

If you feel that the chair is not balance you can adjust the foot nails to level according to your needs.

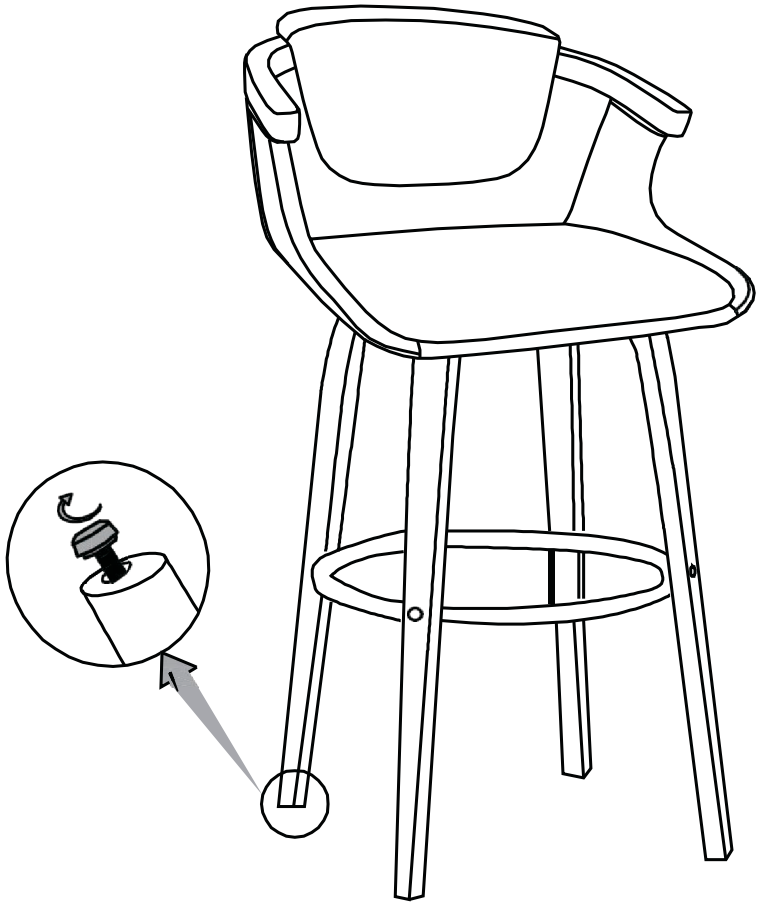

Be sure to keep spare parts.

If screws or nails of a product are damaged or lost, or screws or nails of a subsequent product are damaged or aged, spare parts can be used to replace them.

7



Jx4

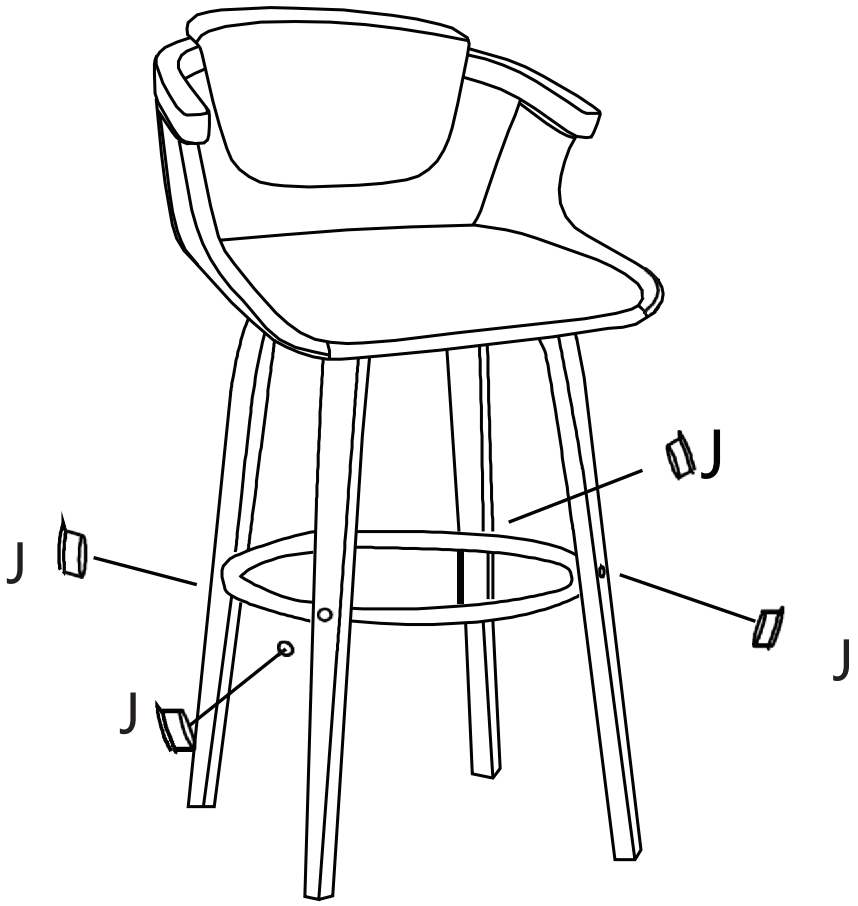

SPARE PARTS

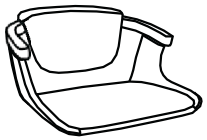

A×1

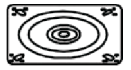

B×1



C×1

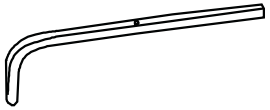

D×4

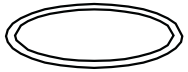

E×1



M6*25MM
F×4 + 1EXT

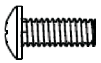

M6*20MM
G×10 + 1EXT



M6*16MM
H×2 + 1EXT



I×2



J×4



M6
K×1



L×1

1



C×1



D×4



M6*20MM

G×4



M6

K×1

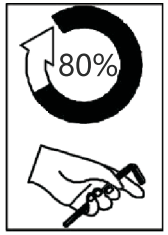

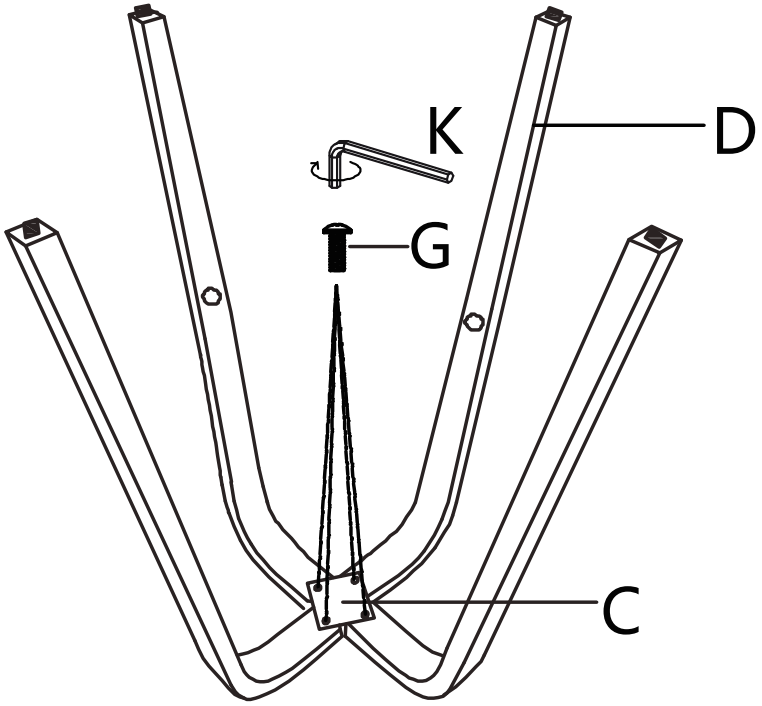

Install the 4 screws G to 50% in sequence.
After all the four screws are installed,tighten them to 80%.

6



A×1



M6*20MM

G×2



M6*16MM

H×2



I×2



M6

Kx1

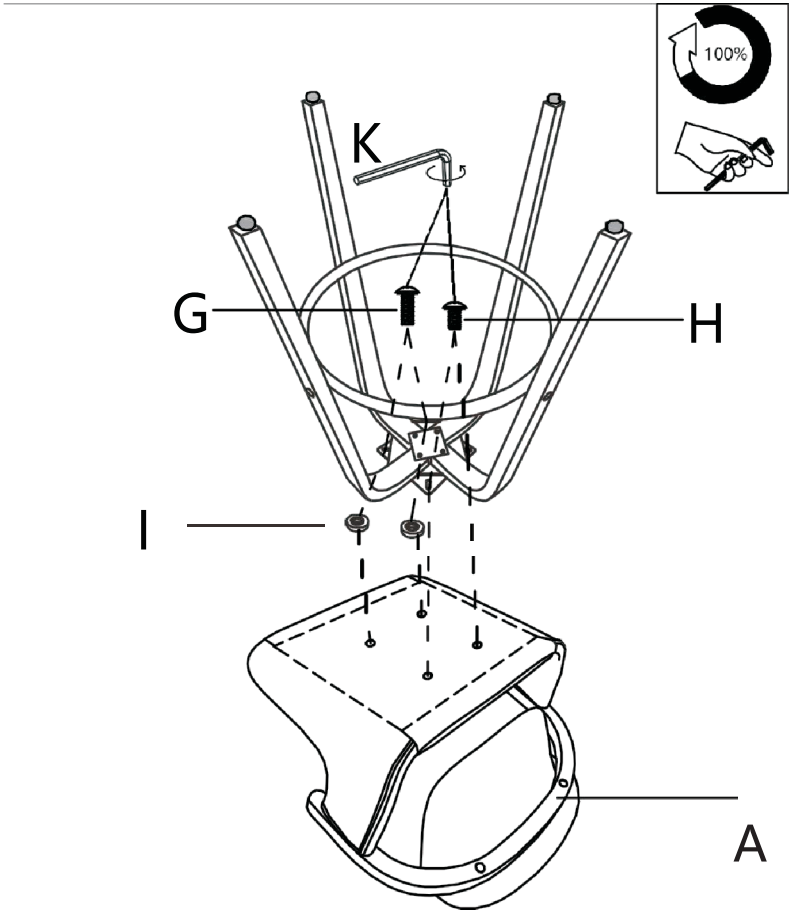

Install the 4 screws G and H to 50% in sequence.
After all the four screws are installed,tighten them to 100%

5



Ix2

Note:Accessories I should be placed at the front end,not at the back end

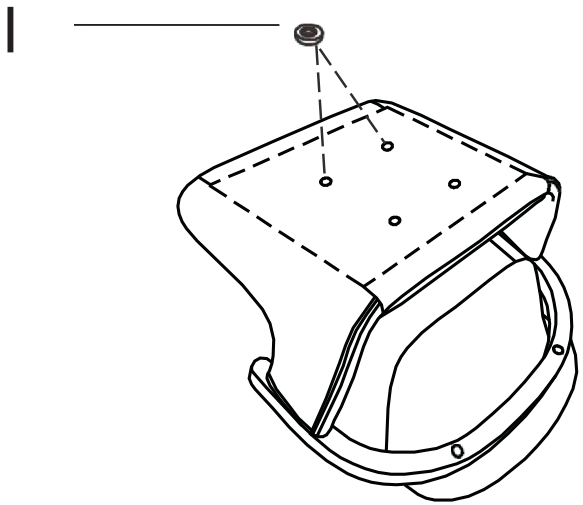

2



E×1



M6*25MM

F×4



K×1

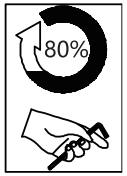

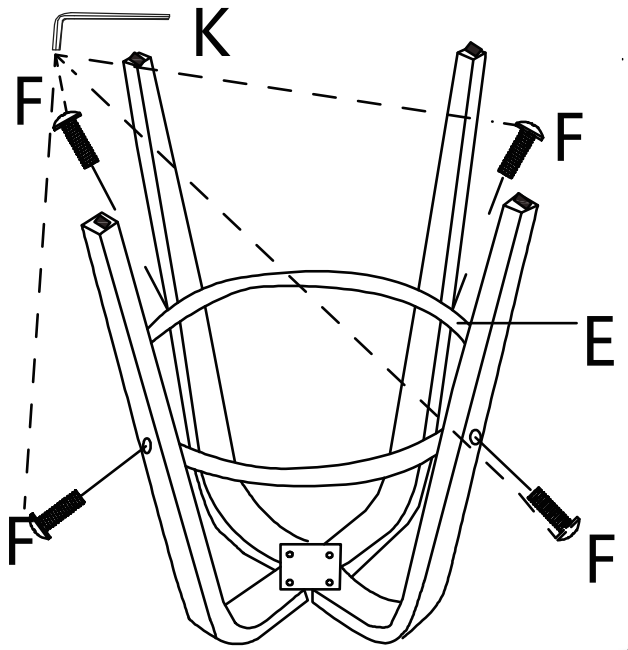

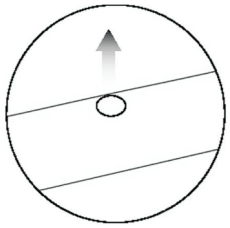

Note: When installing accessory E make sure the drain hole is facing up

Install the 4 screws F to 50% in sequence.
After all the four screws are installed,tighten them to 80%.

3



Bx1

Note:When installing the turntable, please rotate the turntable 45 degrees.

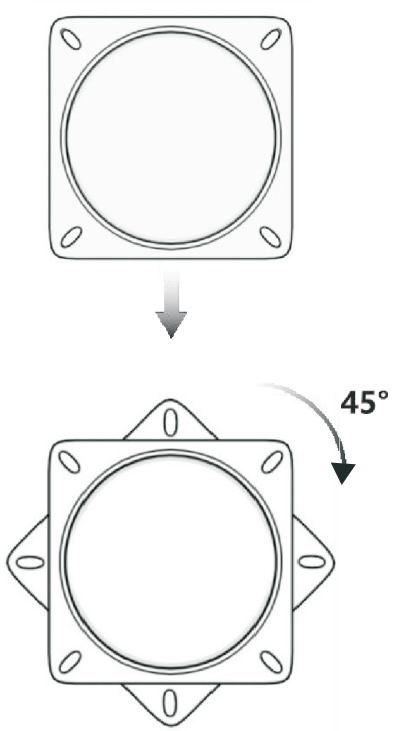

4

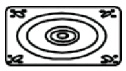

B×1



G×4



K×1

Install 4 screws G to 50% in sequence.

After all 4 screws are installed,tighten them to 100%

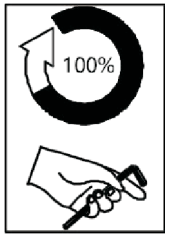

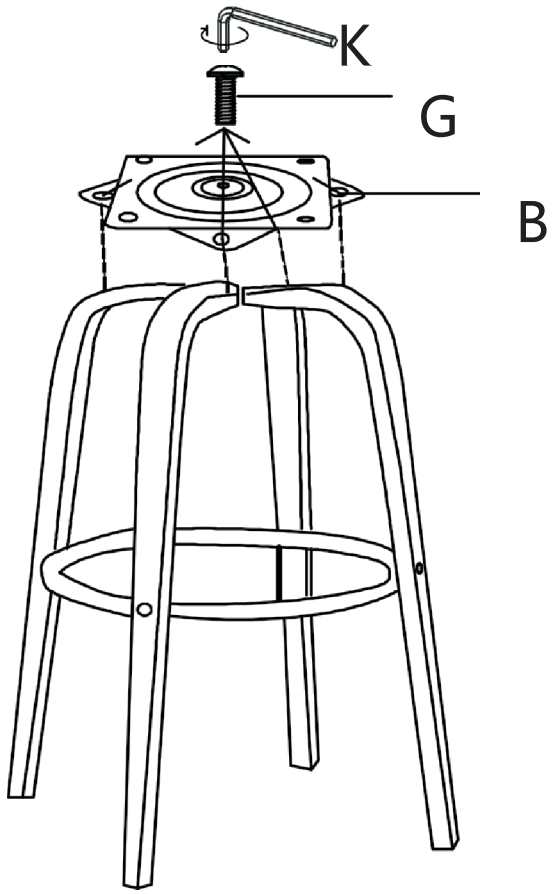

Fasten All screws indicate on Step 1& Step2.