ASSEMBLY INSTRUCTIONS

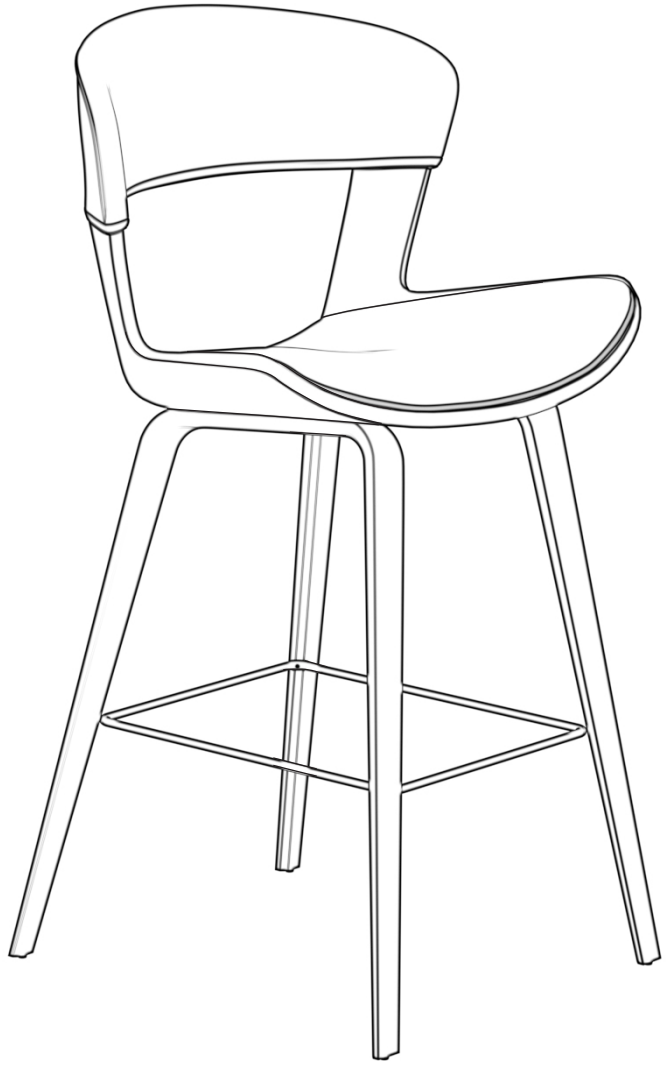

BAR STOOL

www.artleon.com
Email: hello@artleon.com

If you feel that the chair is not balance
you can adjust the foot nails to level according to your needs

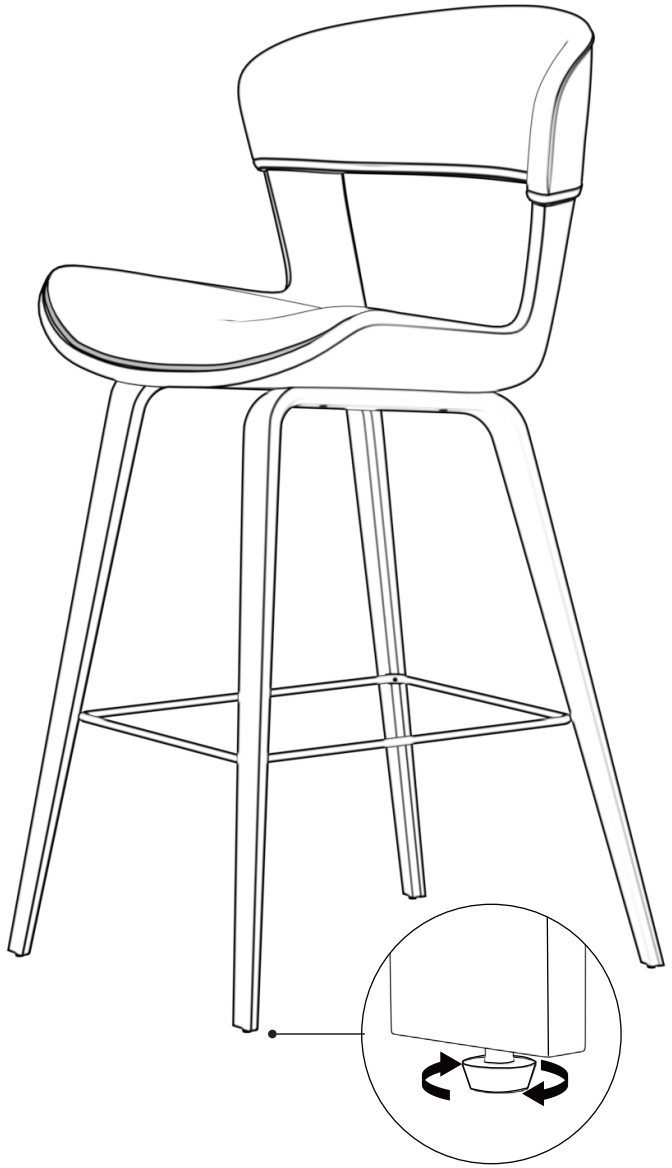

Be sure to keep spare parts.

If screws or nails of a product are damaged or lost,
or screws or nails of a subsequent product are
damaged or aged, spare parts can be used to replace them.

1

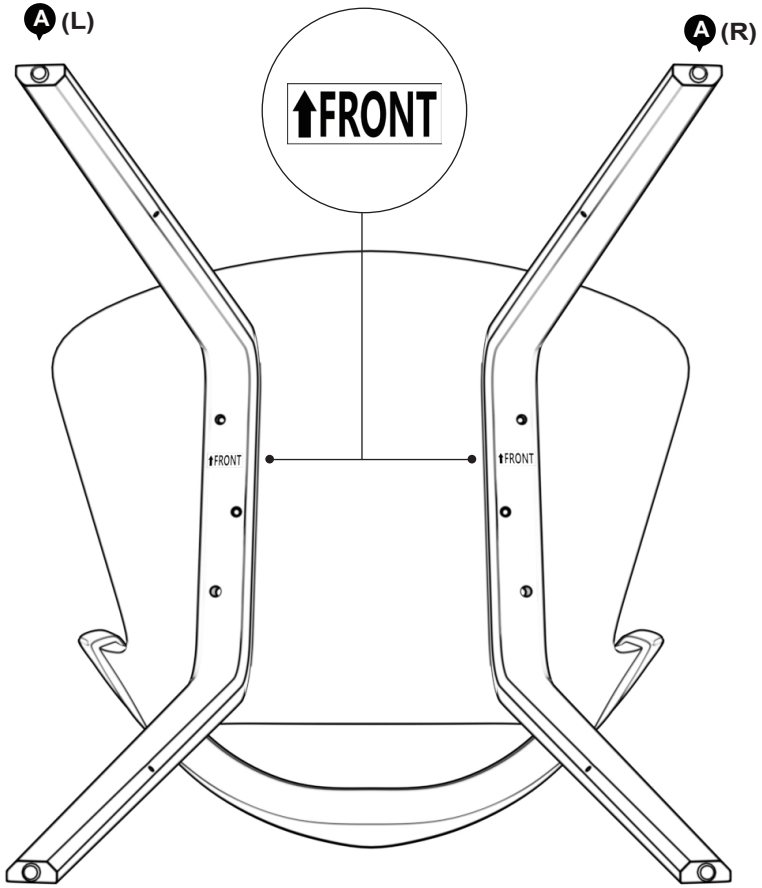

2



Please install screw E to 30% in order

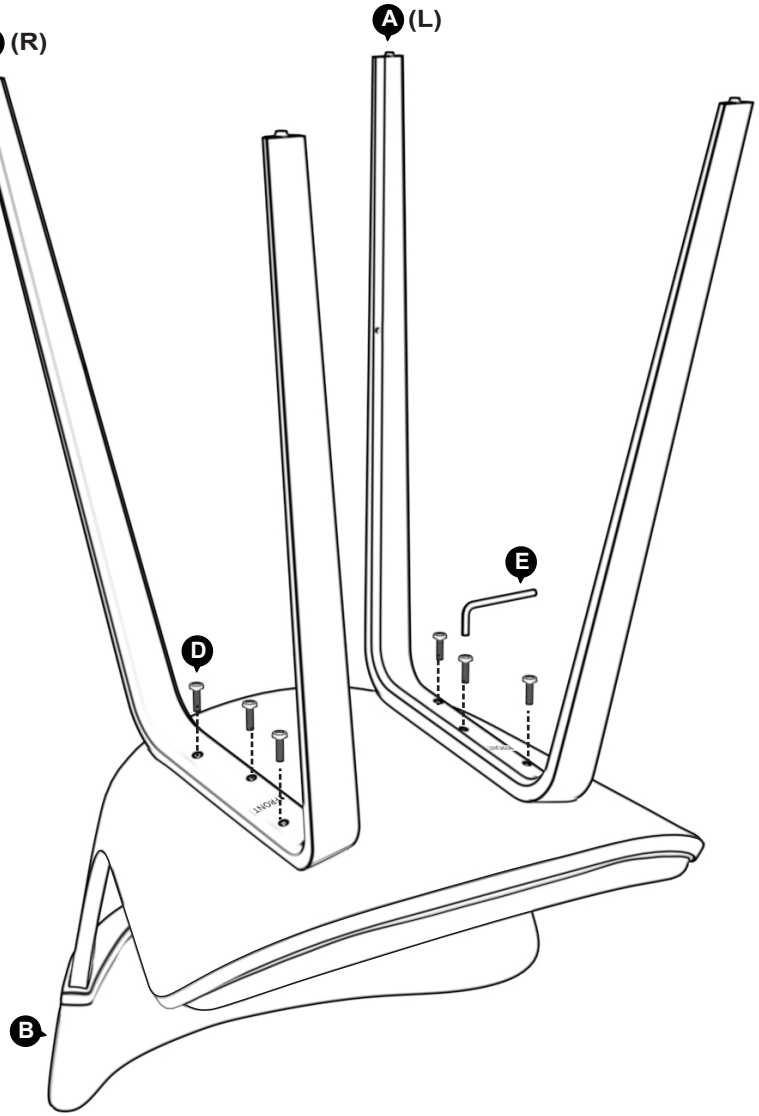

3

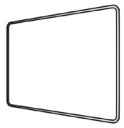

Cx1

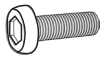

Dx4

Install the 4 screws E to 50% in sequence
After all the 4 screws are installed
tighten the screws in Step 1 and Step 2 to 100%

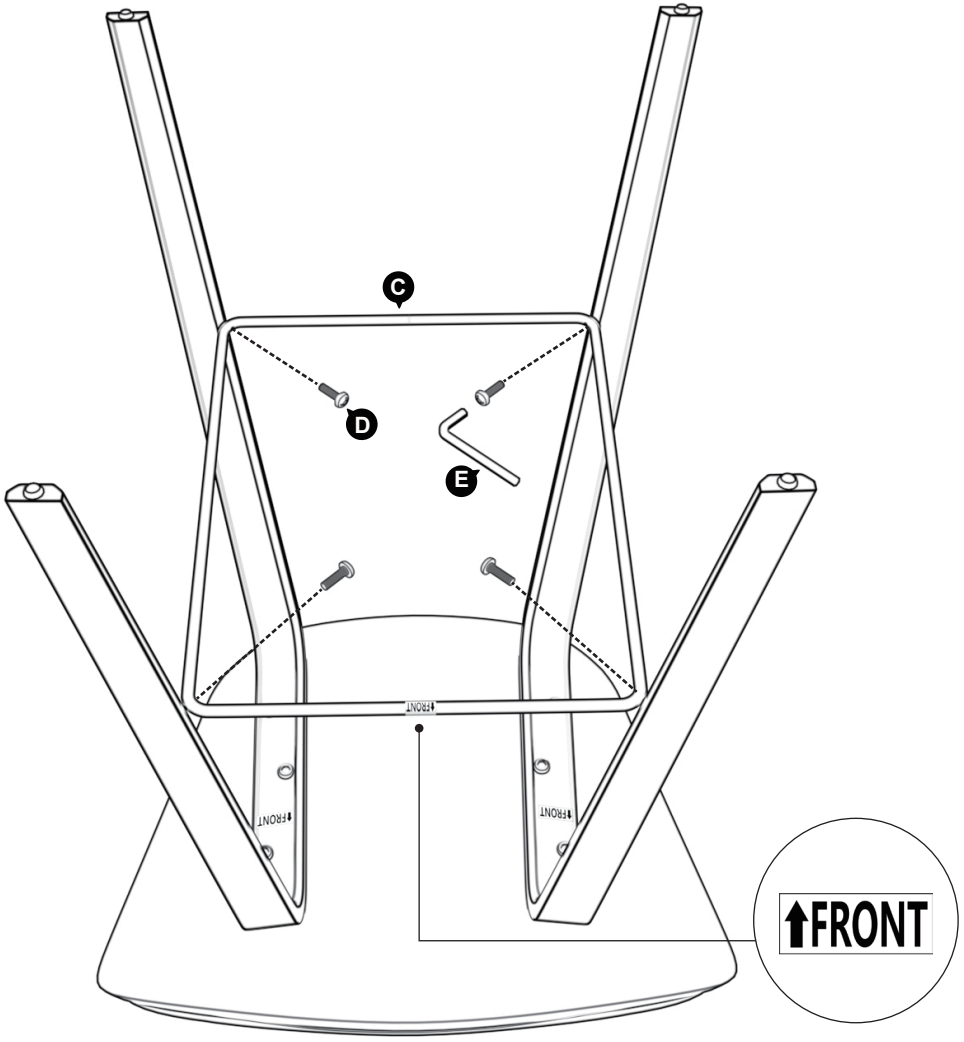

SPARE PARTS

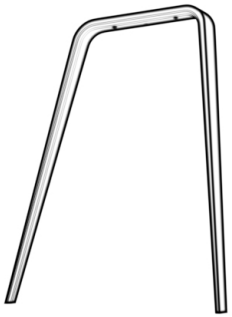

A(L)

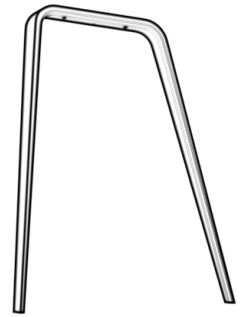

A(R)

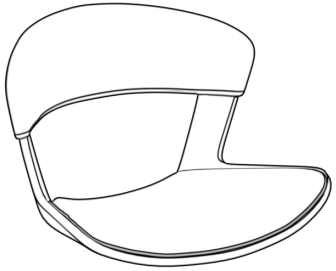

Bx1

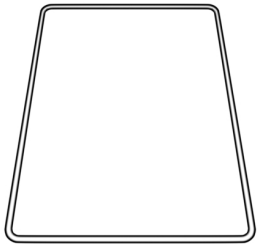

Cx1

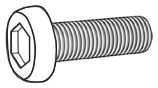

Dx10+1extra
(M6*30mm)



Ex1